PRICE $2.00

HEATH COMPANY • BENTON HARBOR, MICHIGAN



HEATHKIT®
ASSEMBLY MANUAL

HEATHKIT®

LABORATORY OSCILLOSCOPE
MODEL IO-14

Copyright © 1966
Heath Company
All rights reserved

595-803-01
1-3-69

TYPICAL COMPONENT TYPES

This chart is a guide to commonly used types of electronic components. The symbols and related illustrations should prove helpful in identifying most parts and reading the schematic diagrams.

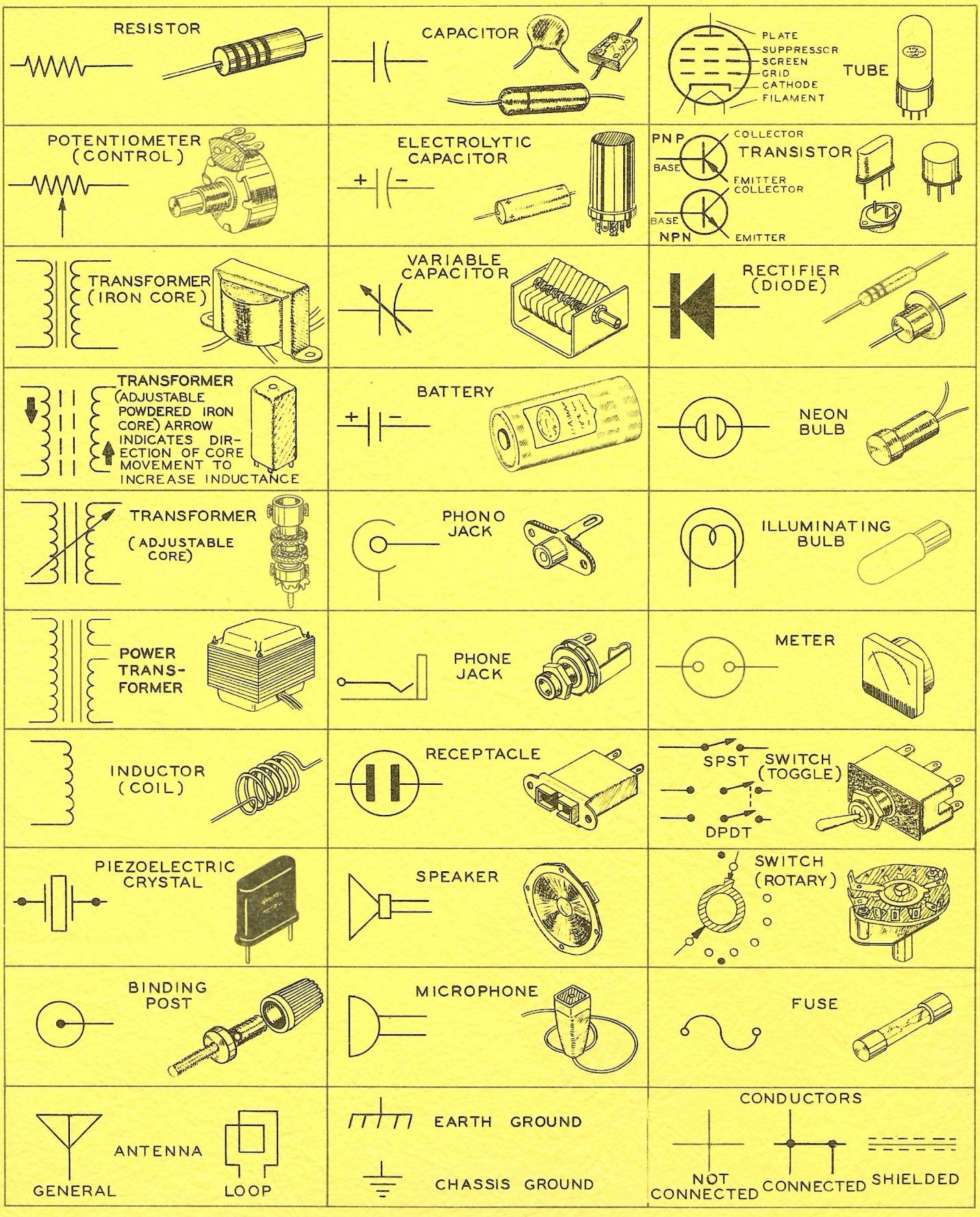

Assembly and Operation

of the

HEATHKIT

LABORATORY OSCILLOSCOPE

MODEL IO-14

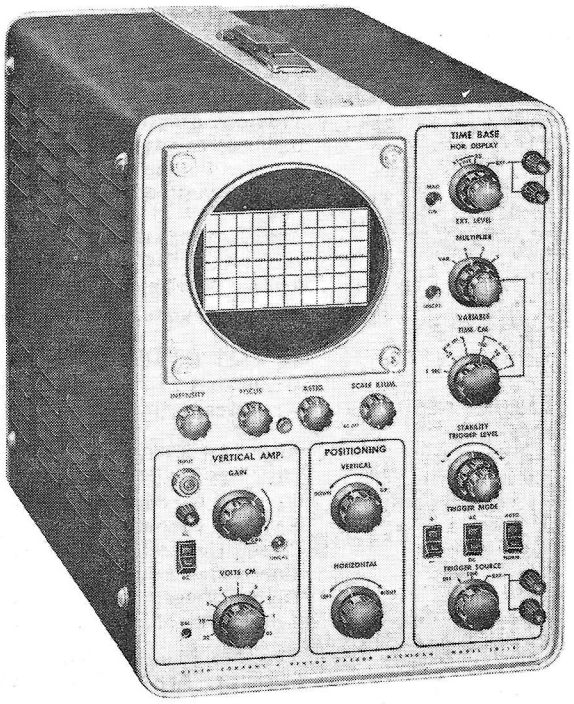

HEATH COMPANY
BENTON HARBOR, MICHIGAN 49022

TABLE OF CONTENTS

INTRODUCTION. 3
UNPACKING INSTRUCTIONS. 5
CIRCUIT BOARDS
Trigger Circuit Board. 7
Parts List #1. 7
Step-By-Step Assembly. 8

HIGH VOLTAGE CIRCUIT BOARD
Parts List #2. 10
Step-By-Step Assembly. 11

LOW VOLTAGE CIRCUIT BOARD
Parts List #3. 13
Step-By-Step Assembly. 14

VERTICAL CIRCUIT BOARD
Parts List #4. 17
Step-By-Step Assembly. 18

HORIZONTAL CIRCUIT BOARD
Parts List #5. 21
Step-By-Step Assembly. 22

FRONT AND REAR PANELS
Parts List #6. 27
Step-By-Step Assembly. 30
Wiring Switch AA (#63-414). 30
Wiring Switch AB (#63-415). 32
Wiring Switch AC (#63-413). 33
Wiring Switch AW (#63-416). 34
Front Subpanel Assembly. 38
Front Subpanel Wiring. 40
Rear Panel Assembly. 44
Rear Panel Wiring. 45

TOP AND BOTTOM CHASSIS
Parts List #7. 47
Step-By-Step Assembly. 48
Chassis Support Bracket Assembly And Wiring 48
Bottom Chassis Assembly. 50
CRT Support Chassis Assembly And Wiring. 52
Top Chassis Assembly. 58

UNIT ASSEMBLY AND WIRING
Parts List #8. 59
Step-By-Step Assembly. 62
Front Panel, Rear Panel, And CRT Support Chassis Mounting. 62
Bottom Chassis Wiring. 64
Bottom Harness To Bottom Chassis Wiring. . . . 65
Top Harness To Top Chassis Wiring. 67
Front Subpanel To Bottom Chassis Wiring. 68
Top Harness To Front Subpanel Wiring. 69
Front Subpanel To Top Chassis Wiring. 70
CRT Shield Mounting And Wiring. 70
CRT Socket Wiring. 72
Top Harness To Bottom Chassis Wiring. 73
Bottom Harness To Transformer Wiring. 74
Alternate Line Voltage Wiring. 75
240 V AC Wiring. 75
120 V AC Wiring. 75
Top And Bottom Rail Assembly And Mounting. . . 76
Vertical Shield And Front Panel Mounting. 79
Panel Ring Mounting. 80
Knob And CRT Installation. 80
Rear Panel Shorting Link Mounting. 83

INITIAL TESTS. 85
Front Panel Control Settings. 86
Internal Control Settings. 87
Adjustments. 87

CALIBRATION
Trigger Circuits. 91
Time Base Circuits. 93
Sweep Linearity Circuits. 93
Vertical Amplifier Circuits. 94
Input Attenuator. 96
Final Adjustments. 98
Low Capacitance (X10) Probe. 98

FINAL ASSEMBLY. 99
CONTROL FUNCTIONS AND OPERATIONS. 103
Time/CM Frequency Correlation Chart. 107
Voltage Charts. . . . . (fold-out from Page). 110

IN CASE OF DIFFICULTY
General. 111
Troubleshooting Chart. 113

SPECIFICATIONS. 117
CIRCUIT DESCRIPTION. 121
Vertical Circuits. 122
Trigger Circuits. 125
Sweep Generator Circuits. 126
Horizontal Amplifier. 129
High Voltage. 130
Low Voltage. 132

Chassis Photographs. 134
CIRCUIT BOARD X-RAY VIEWS. . (fold-out from Page). 134
SCHEMATIC. . . (fold-out from Page) 139
REPLACEMENT PARTS PRICE LIST. 141

INTRODUCTION

The Heathkit Model IO-14 Laboratory Oscilloscope is a highly accurate and dependable instrument which has a wide range of applications. When properly assembled and calibrated, this oscilloscope can be used to observe or measure all types of electrical and electronic waveforms within its listed specifications, from relatively simple sine and square waves to complex pulse and composite signals. The basic functions and uses of this instrument are like those found in other high quality oscilloscopes with high sensitivity and wide frequency response.

The following professional features make the Model IO-14 Oscilloscope outstanding: An accurately calibrated Volts/CM attenuator switch and a variable Gain control; vertical signal delay sufficient to view the leading edge of a waveform; triggered horizontal sweep circuits; selection of the triggering point on the waveform; calibrated Time/CM sweep selection in 18 steps, plus a variable multiplier; a display magnifier that expands any two-centimeter portion of a normal display to full-screen size; indicators to remind the user when the oscilloscope is operated in an uncalibrated mode; provisions for use of external triggering signals and external horizontal deflection signal.

The power supply is designed so the Oscilloscope can be operated from either a 105 to 125 volt 50/60 cps or from a 210 to 250 volt 50/60 cps AC power source. Quick release fasteners permit easy removal of the cabinet, and fan cooling keeps the Oscilloscope from overheating. A push-button reset circuit breaker provides overload protection.

NOTE: Refer to Page 5 of the Manual for complete unpacking instructions. Use the "Kit Builders Guide" for information on parts identification, tools, wiring, soldering, and step-by-step assembly procedures.

UNPACKING INSTRUCTIONS

The Oscilloscope packaging consists of the large shipping carton, which contains smaller packages and a number of loose parts. Some of the smaller packages have numbers 1 through 7 stamped on them. After these seven numbered packages have been removed from the large carton, the remaining parts will be considered to be package #8.

Package #8 consists of items too large to fit into the small packages, and those items used in a number of the assembly sections, such as the wire. The small packages remaining in package #8 should be opened so these parts will be accessible when called for in one of the Parts Lists.

You will be directed to open each of these packages as they are needed. Each of the eight assembly sections of the Manual contains its own Parts List and Step-By-Step instructions. At the beginning of each Parts List you will be told which numbered package to open. You will also be directed to remove the parts from package #8 that are required to complete that assembly section.

To avoid intermixing parts, do not open any of the parts packs until directed to do so at the beginning of one of the Parts List. Any part that is packaged in an individual envelope with a part number on it, should be placed back in its envelope after it is identified, until that part is called for in a step.

PARTS PICTORIAL

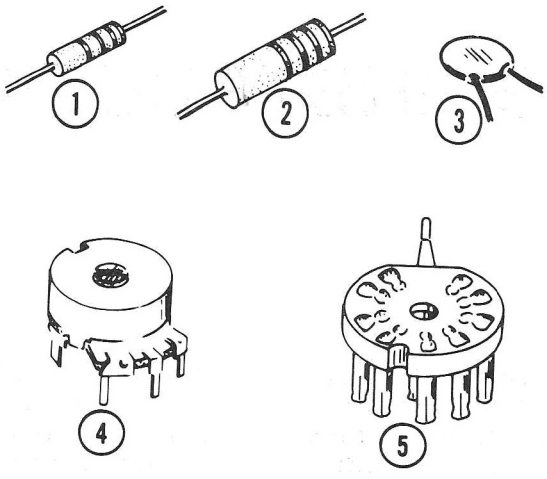

CIRCUIT BOARDS

This section of the Manual contains a separate Parts List and separate Step-By-Step Assembly instructions for each of the five circuit boards to be assembled.

TRIGGER CIRCUIT BOARD

PARTS LIST #1

Unpack package #1 and check each part against the following Parts List. The numbers in parentheses are keyed to the numbers in the Parts Pictorial.

PART No.	PARTS Per Kit	DESCRIPTION
RESISTORS		
1/2 Watt		
(1) 1-3	1	100 Ω (brown-black-brown)
1-8	1	820 Ω (gray-red-brown)
1-14	1	3300 Ω (orange-orange-red)
1-18	1	5600 Ω (green-blue-red)
1-26	1	100 KΩ (brown-black-yellow)
1-121	1	120 KΩ (brown-red-yellow)
1-27	1	150 KΩ (brown-green-yellow)
1-29	1	220 KΩ (red-red-yellow)
1-37	1	2.2 megohm (red-red-green)
1 Watt		
(2) 1-5-1	1	22 KΩ (red-red-orange)
1-58-1	1	12 KΩ (brown-red-orange)

PART No.	PARTS Per Kit	DESCRIPTION
CAPACITORS		
Disc		
(3) 21-5	1	20 μμf
21-7	1	33 μμf
21-16	1	.01 μfd
GENERAL		
(4) 10-165	1	100 KΩ tab mount control
(5) 434-130	2	9-pin tube socket
		Solder
ITEMS FROM PACK #8		
85-172-1	1	Trigger circuit board
597-308	1	Kit Builders Guide
595-803	1	Manual

STEP-BY-STEP ASSEMBLY

Before starting to assemble this kit, review the circuit board wiring and soldering instructions in the Kit Builders Guide.

Use 1/2 watt resistors unless directed otherwise in a step. All resistors will be called out by only the resistance value (in Ω, KΩ, or megohms) and color code. Capacitors will be called out by only the capacitance value and type.

When a circuit board is finished, set it aside until it is called for later in the assembly instructions.

Position the trigger circuit board (#85-172-1) lettered side up as shown in Pictorial 1-1. Complete each step on the Pictorial.

START

( ) 5600 Ω (green-blue-red).
( ) 100 KΩ (brown-black-yellow).
( ) 100 Ω (brown-black-brown).
( ) 820 Ω (gray-red-brown).
( ) 150 KΩ (brown-green-yellow).
( ) 20 μμf disc.
( ) 3300 Ω (orange-orange-red).
( ) 12 KΩ 1 watt (brown-red-orange).
( ) Solder all connections and cut off excess leads.

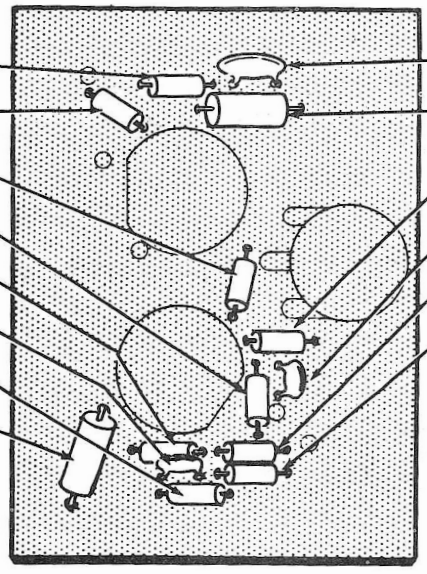

CONTINUE

( ) .01 μfd disc.
( ) 22 KΩ 1 watt (red-red-orange).
( ) 220 KΩ (red-red-yellow).
( ) 33 μμf disc.
( ) 2.2 megohm (red-red-green).
( ) 120 KΩ (brown-red-yellow).
( ) Solder all connections and cut off excess leads.

PROCEED TO PICTORIAL 1-2

PICTORIAL 1-1

START

NOTE: Solder the connections of each part as it is installed.

( ) 100 KΩ control (#10-165).

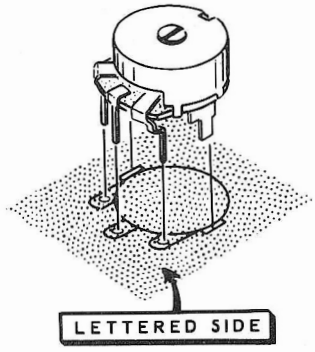

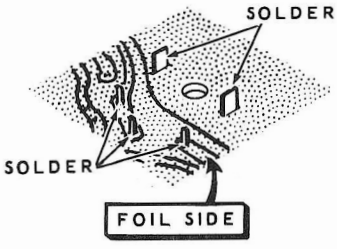

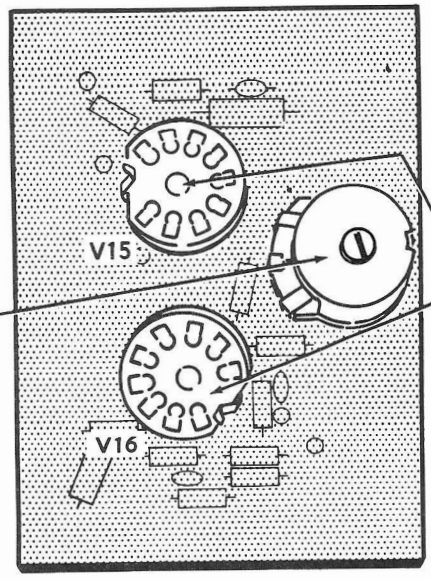

CONTINUE

( ) Install 9-pin tube sockets at V15 and V16.

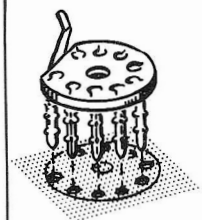

ALIGN ALL PINS WITH THEIR RESPECTIVE HOLES.



PRESS THE SOCKET DOWN UNTIL IT SNAPS IN PLACE.

( ) Check to see that all connections are soldered.

FINISH

PROCEED TO PAGE 10.

PICTORIAL 1-2

HIGH VOLTAGE CIRCUIT BOARD

PARTS LIST #2

Unpack package #2 and check each part against the following Parts List. The numbers in parentheses are keyed to the numbers in the Parts Pictorial.

	PART No.	PARTS Per Kit	DESCRIPTION
	RESISTORS		
	1/2 Watt		
(1)	1-1	2	47 Ω (yellow-violet-black)
	1-9	1	1000 Ω (brown-black-red)
	1-11	1	1500 Ω (brown-green-red)
	1-20	1	10 KΩ (brown-black-orange)
	1-25	1	47 KΩ (yellow-violet-orange)
	1-33	2	470 KΩ (yellow-violet-yellow)
	1 Watt		
(2)	1-1-1	1	470 Ω (yellow-violet-brown)
	1-34-1	1	1 megohm (brown-black-green)
	1-36-1	1	2.2 megohm (red-red-green)
	1-37-1	1	3.3 megohm (orange-orange-green)
	1-40-1	2	10 megohm (brown-black-blue)
	2 Watt		
(3)	1-10-2	1	47 KΩ (yellow-violet-orange)
	CAPACITORS		
	Disc		
(4)	21-14	1	.001 μfd
	21-90	3	.001 μfd 3 KV
	21-116	4	.005 μfd 3 KV
	21-31	1	.02 μfd
	Electrolytic		
(5)	25-135	1	20 μfd 350 V
	25-158	1	20 μfd 450 V
	GENERAL		
(6)	10-179	1	7.5 megohm tab mount control
(7)	57-36	2	Selenium rectifier
(8)	207-18	1	3/8" plastic clamp
(9)	250-89	1	6-32 x 3/8" screw
(10)	252-3	1	6-32 nut
(11)	254-1	1	#6 lockwasher
(12)	411-116	1	HV173 tube
	General (cont'd.)		
(13)	434-129	1	7-pin tube socket
	434-130	1	9-pin tube socket
	490-5	1	Nut starter (see Page 3 of the Kit Builders Guide)
	ITEMS FROM PACK #8		
	CAUTION: Pick up the high voltage transformer only by its frame. Do not touch the leads, as they could break easily.		
(14)	51-134	1	High voltage transformer
	85-143-1	1	High voltage circuit board

PARTS PICTORIAL

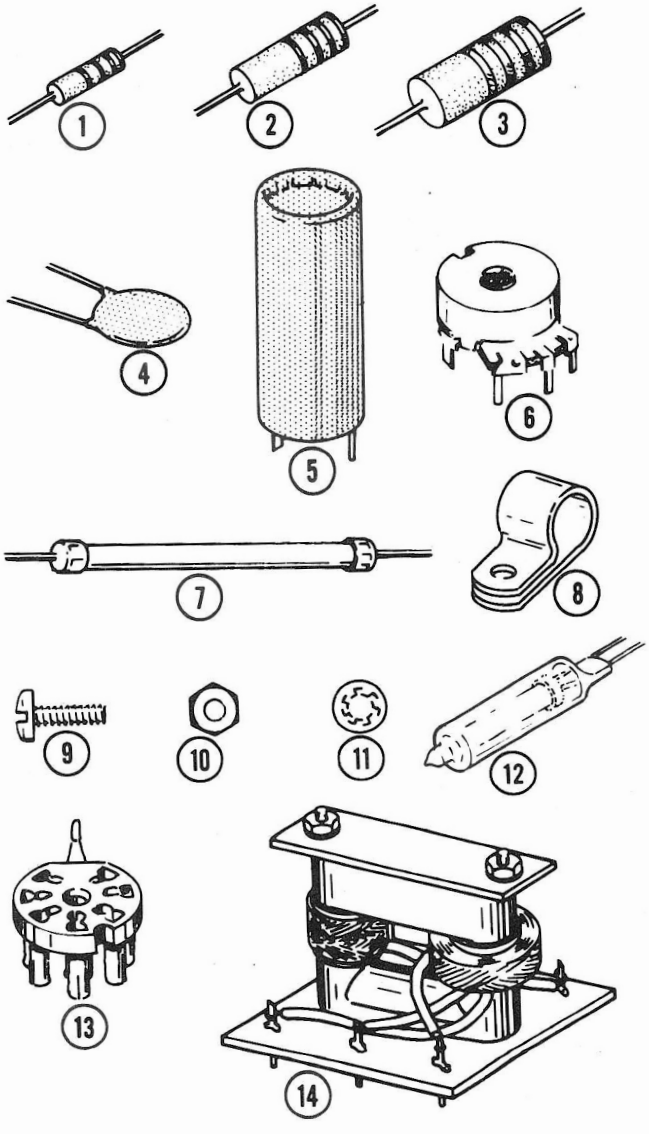

STEP-BY-STEP ASSEMBLY

Position the high voltage circuit board (#85-143-1) lettered side up as shown in Pictorial 1-3. Complete each step on the Pictorial.

START

( ) 1 megohm 1 watt (brown-black-green).

( ) 10 KΩ (brown-black-orange).

NOTE: Use the 3 KV capacitors only when they are called for in a step.

( ) .005 μfd 3 KV disc.

( ) .005 μfd 3 KV disc.

( ) .02 μfd disc.

( ) .005 μfd 3 KV disc.

( ) 10 megohm 1 watt (brown-black-blue).

( ) Solder all connections and cut off the excess leads.

( ) 10 megohm 1 watt (brown-black-blue).

( ) 2.2 megohm 1 watt (red-red-green).

( ) 47 Ω (yellow-violet-black).

( ) 47 Ω (yellow-violet-black).

( ) 470 KΩ (yellow-violet-yellow).

( ) Solder all connections and cut off the excess leads.

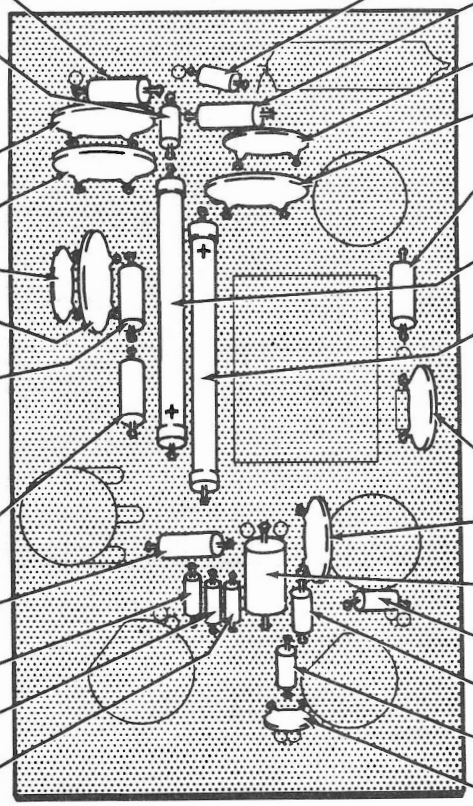

CONTINUE

( ) 470 KΩ (yellow-violet-yellow).

( ) 3.3 megohm 1 watt (orange-orange-green).

( ) .001 μfd 3 KV disc.

( ) .005 μfd 3 KV disc.

( ) 470 Ω 1 watt (yellow-violet-brown).

( ) Selenium rectifier (#57-36). Position the (+) end as shown.

( ) Selenium rectifier (#57-36). Position the (+) end as shown.

( ) Solder all connections and cut off the excess leads.

( ) .001 μfd 3 KV disc.

( ) .001 μfd 3 KV disc.

( ) 47 KΩ 2 watt (yellow-violet-orange).

( ) 1000 Ω (brown-black-red).

( ) 1500 Ω (brown-green-red).

( ) 47 KΩ (yellow-violet-orange).

( ) .001 μfd disc.

( ) Solder all connections and cut off the excess leads.

PROCEED TO PICTORIAL 1-4

PICTORIAL 1-3

START

NOTE: Solder the connections of each part as it is installed.

( ) Tube HV173. Use a 3/8" plastic clamp, a 6-32 x 3/8" screw, a #6 lockwasher, and a 6-32 nut. The lead next to the color dot on the tube goes into the marked hole on the circuit board. Do not overtighten the hardware, as the tube can be broken.

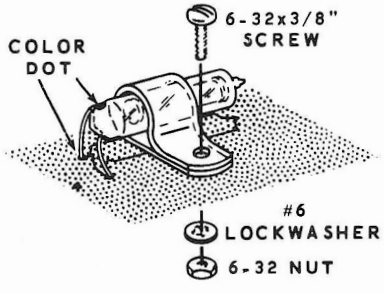

( ) Solder both connections and cut off the excess leads.

( ) 7.5 megohm control (#10-179). Solder all five connections.

( ) Install a 9-pin tube socket at V23.

( ) Install a 7-pin tube socket at V24.

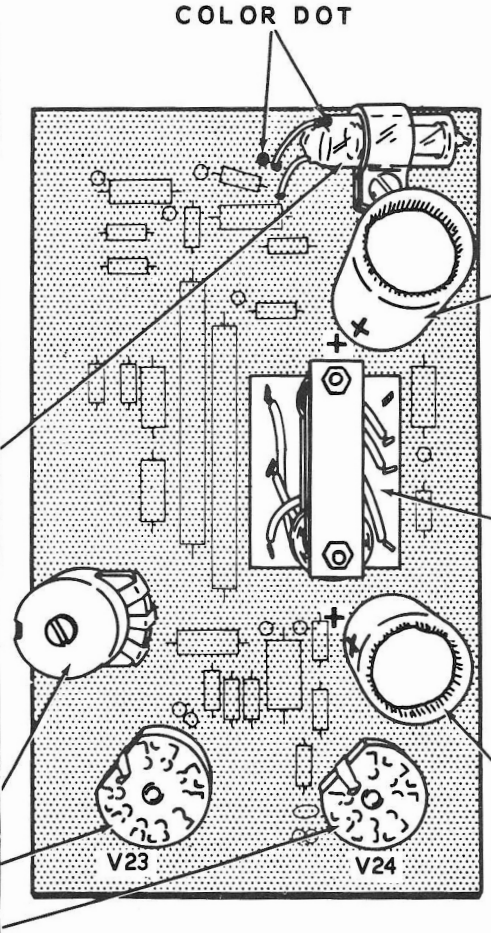

CONTINUE

NOTE: When installing electrolytic capacitors, position the positive (+) marked lead into the positive (+) marked hole on the circuit board.

( ) 20 μfd 450 V electrolytic (#25-158). Note (+) marking.

( ) High voltage transformer (#51-134).

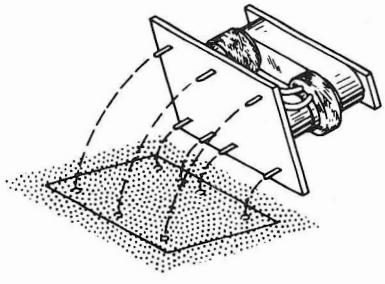

( ) 20 μfd 350 V electrolytic (#25-135). Note (+) marking.

( ) Check to see that all connections are soldered.

FINISH

PROCEED TO PAGE 13.

PICTORIAL 1-4

LOW VOLTAGE CIRCUIT BOARD

PARTS LIST #3

Unpack package #3 and check each part against the following Parts List. The numbers in parentheses are keyed to the numbers in the Parts Pictorial.

PART No.	PARTS Per Kit	DESCRIPTION
RESISTORS		
1/2 Watt		
(1) 1-9	3	1000 Ω (brown-black-red)
1-21	1	15 KΩ (brown-green-orange)
1-22	1	22 KΩ (red-red-orange)
1-24	2	33 KΩ (orange-orange-orange)
1-47	1	56 KΩ (green-blue-orange)
1-60	1	68 KΩ (blue-gray-orange)
1-26	1	100 KΩ (brown-black-yellow)
1-121	1	120 KΩ (brown-red-yellow)
1-33	1	470 KΩ (yellow-violet-yellow)
1-68	2	820 KΩ (gray-red-yellow)
1-35	5	1 megohm (brown-black-green)
Precision		
(2) 2-40	2	68.38 KΩ
2-99	1	50 KΩ
2-11	1	100 KΩ
2-102	1	196 KΩ
2-138	1	400 KΩ
CAPACITORS		
(3) 21-31	1	.02 μfd disc
(4) 25-135	3	20 μfd 350 V electrolytic

PART No.	PARTS Per Kit	DESCRIPTION
GENERAL		
(5) 10-38	1	10 KΩ tab mount control
(6) 434-129	1	7-pin tube socket
434-130	1	9-pin tube socket
(7) 434-140	4	12-pin tube socket
ITEM FROM PACK #8		
85-144-1	1	Low voltage circuit board

PARTS PICTORIAL

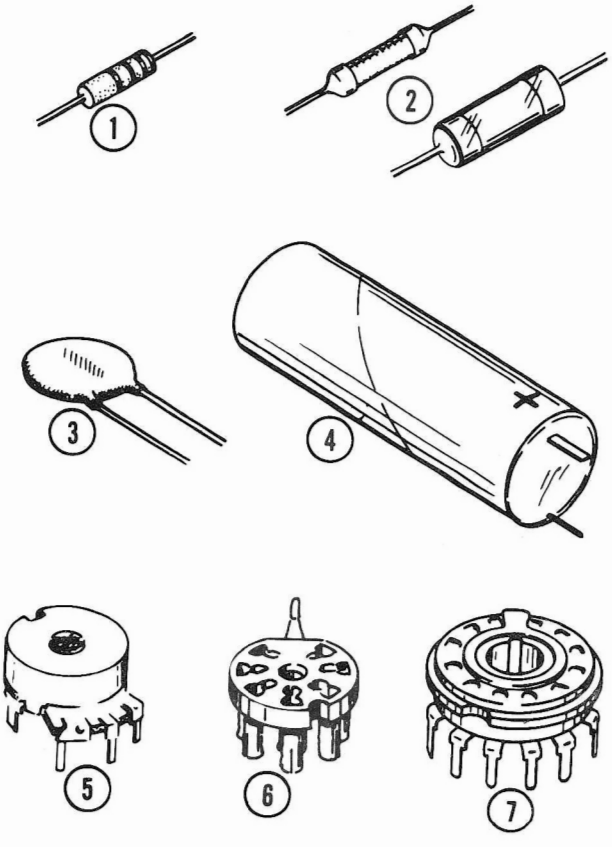

STEP-BY-STEP ASSEMBLY

Only a portion of the low voltage circuit board is shown in each of the next two Pictorials because of the large size of the circuit board. A small drawing at the top of each Pictorial shows the area of the circuit board to be assembled.

Position the low voltage circuit board (#85-144-1) lettered side up as shown in Pictorial 1-5. Complete each step on the Pictorial.

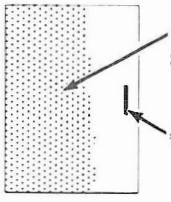

START

( ) .02 μfd disc.

( ) 100 KΩ (brown-black-yellow).

( ) 1000 Ω (brown-black-red).

( ) 470 KΩ (yellow-violet-yellow).

( ) 15 KΩ (brown-green-orange).

( ) 820 KΩ (gray-red-yellow).

( ) 1000 Ω (brown-black-red).

( ) Solder all connections and cut off excess leads.

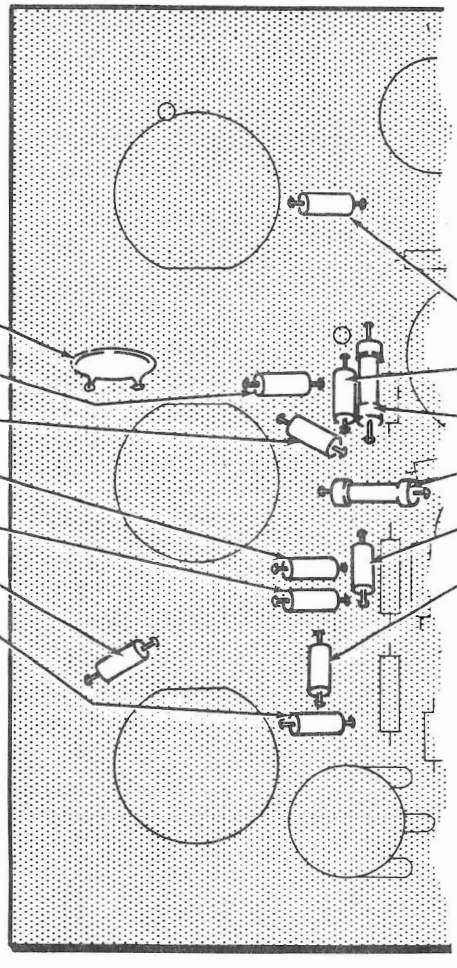

CONTINUE

( ) 1000 Ω (brown-black-red).

( ) 1 megohm (brown-black-green).

( ) 400 KΩ precision.

( ) 68.38 KΩ precision.

( ) 68 KΩ (blue-gray-orange).

( ) 1 megohm (brown-black-green).

( ) Solder all connections and cut off excess leads.

PROCEED TO PICTORIAL 1-6

PICTORIAL 1-5

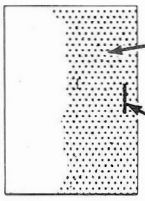

START

( ) 1 megohm (brown-black-green).
( ) 820 KΩ (gray-red-yellow).
( ) 1 megohm (brown-black-green).
( ) 196 KΩ precision.
( ) 100 KΩ precision.
( ) 50 KΩ precision.
( ) 22 KΩ (red-red-orange).
( ) Solder all connections and cut off excess leads.

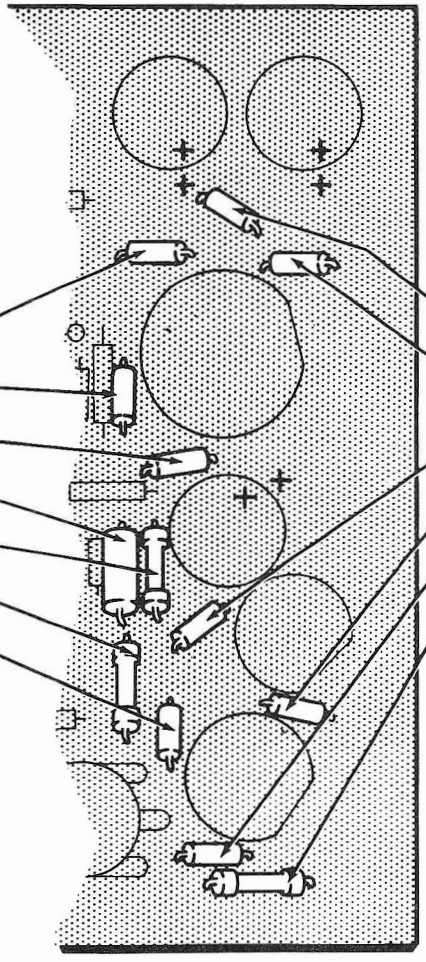

CONTINUE

( ) 120 KΩ (brown-red-yellow).
( ) 56 KΩ (green-blue-orange).
( ) 33 KΩ (orange-orange-orange).
( ) 33 KΩ (orange-orange-orange).
( ) 1 megohm (brown-black-green).
( ) 68.38 KΩ precision.
( ) Solder all connections and cut off excess leads.

PROCEED TO PICTORIAL 1-7

PICTORIAL 1-6

START

NOTE: Solder the connections of each part as it is installed.

( ) Install 12-pin tube sockets at V17, V18, V19, and V20. Bend the lugs against the foil to hold the sockets in place while soldering.

( ) Install a 7-pin tube socket at V21.

( ) Install a 9-pin tube socket at V22.

( ) 10 KΩ control (#10-38). Solder all five lugs.

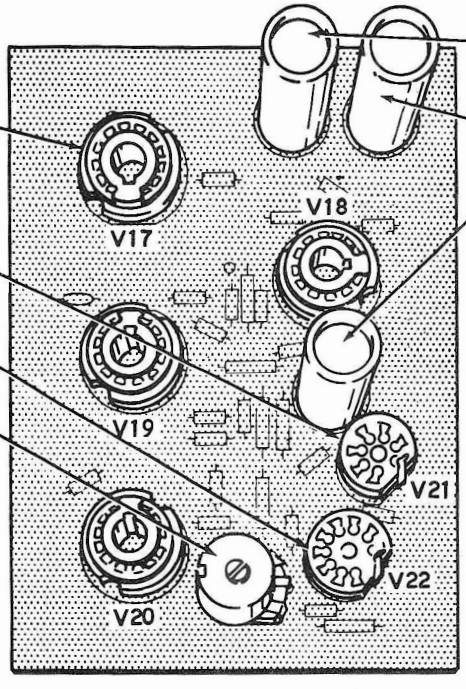

CONTINUE

( ) 20 μfd 350 V electrolytic. Note (+) marking.

( ) 20 μfd 350 V electrolytic. Note (+) marking.

( ) 20 μfd 350 V electrolytic. Note (+) marking.

( ) Check to see that all connections are soldered.

FINISH

PROCEED TO PAGE 17

PICTORIAL 1-7

VERTICAL CIRCUIT BOARD

PARTS LIST #4

Unpack package #4 and check each part against the following Parts List. The numbers in parentheses are keyed to the numbers in the Parts Pictorial.

PART No.	PARTS Per Kit	DESCRIPTION
RESISTORS		
1/2 Watt		
(1) 1-1	13	47 Ω (yellow-violet-black)
1-5	2	360 Ω 5% (orange-blue-brown)
1-9	2	1000 Ω (brown-black-red)
1-21	1	15 KΩ (brown-green-orange)
1-27	1	150 KΩ (brown-green-yellow)
1-29	2	220 KΩ (red-red-yellow)
1 Watt		
(2) 1-56-1	2	1200 (brown-red-red)
1-26-1	2	15 KΩ (brown-green-orange)
1-7-1	2	47 KΩ (yellow-violet-orange)
Other Resistors		
(3) 1-22-2	2	12 KΩ 2 watt (brown-red-orange)
(4) 3-1-5	2	2500 Ω 7 watt wire-wound
CAPACITORS		
(5) 20-102	1	100 μμf mica
(6) 21-31	3	.02 μfd disc
GENERAL		
(7) 10-135	1	500 Ω tab mount control
10-161	1	2 megohm tab mount control
(8) 40-732	2	Driver peaking coil
(9) 412-11	1	NE-2 neon lamp
(10) 434-129	2	7-pin tube socket
434-130	4	9-pin tube socket

PART No.	PARTS Per Kit	DESCRIPTION
ITEMS FROM PACK #8		
85-140-1	1	Vertical circuit board
344-54	1	Length yellow hookup wire

PARTS PICTORIAL

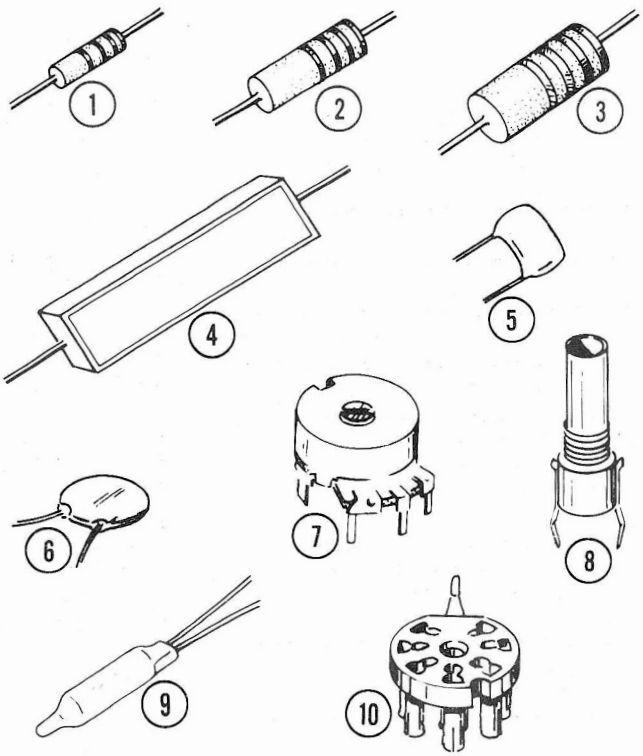

STEP-BY-STEP ASSEMBLY

Only a portion of the vertical circuit board is shown in each of the next two Pictorials because of the large size of the circuit board. A small drawing at the top of each Pictorial shows the area of the circuit board to be assembled.

Position the vertical circuit board (#85-140-1) lettered side up as shown in Pictorial 1-8. Complete each step on the Pictorial.

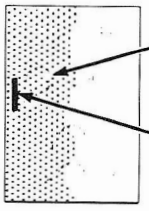

START

( ) 15 KΩ 1 watt (brown-green-orange).

( ) 47 Ω (yellow-violet-black).

( ) 360 Ω (orange-blue-brown) 5%.

( ) 1200 Ω 1 watt (brown-red-red).

( ) 47 Ω (yellow-violet-black).

( ) 1000 Ω (brown-black-red).

( ) 12 KΩ 2 watt (brown-red-orange).

( ) 2500 Ω 7 watt. Position the resistor over the outline on the circuit board.

( ) Solder all connections and cut off excess leads.

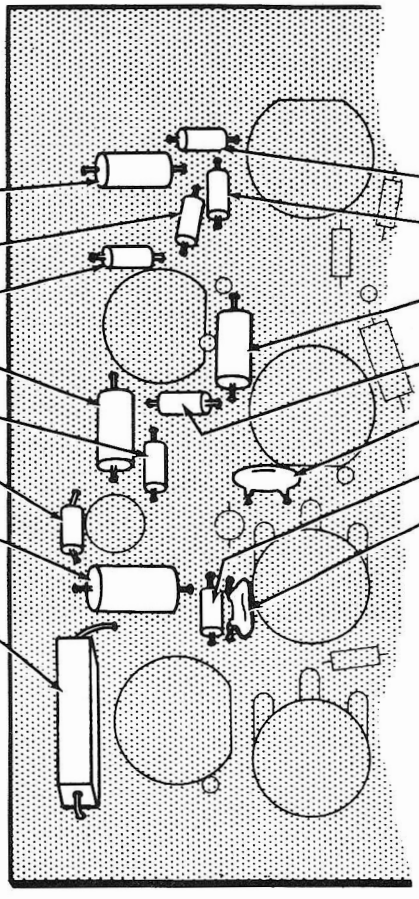

CONTINUE

( ) 47 Ω (yellow-violet-black).

( ) 47 Ω (yellow-violet-black).

( ) 47 KΩ 1 watt (yellow-violet-orange).

( ) 47 Ω (yellow-violet-black).

( ) .02 μfd disc.

( ) 47 Ω (yellow-violet-black).

( ) 100 μμf mica.

( ) Solder all connections and cut off excess leads.

PROCEED TO PICTORIAL 1-9

PICTORIAL 1-8

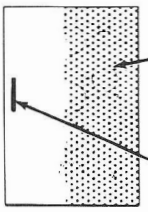

The steps performed in Pictorial 1-9 are in this area of the circuit board.

#85-140-1

START

( ) .02 μfd disc.

( ) 15 KΩ (brown-green-orange).

( ) 220 KΩ (red-red-yellow).

( ) 47 Ω (yellow-violet-black).

( ) 47 Ω (yellow-violet-black).

( ) 47 Ω (yellow-violet-black).

( ) 47 KΩ 1 watt (yellow-violet-orange).

( ) 47 Ω (yellow-violet-black).

( ) 47 Ω (yellow-violet-black).

( ) Solder all connections and cut off excess leads.

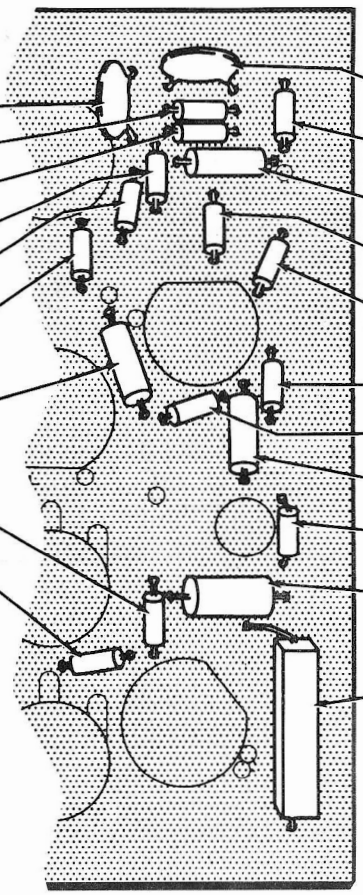

CONTINUE

( ) .02 μfd disc.

( ) 220 KΩ (red-red-yellow).

( ) 15 KΩ 1 watt (brown-green-orange).

( ) 150 KΩ (brown-green-yellow).

( ) 360 Ω (orange-blue-brown) 5%.

( ) 47 Ω (yellow-violet-black).

( ) 47 Ω (yellow-violet-black).

( ) 1200 Ω 1 watt (brown-red-red).

( ) 1000 Ω (brown-black-red).

( ) 12 KΩ 2 watt (brown-red-orange).

( ) 2500 Ω wire-wound. Position the resistor over the outline on the circuit board.

( ) Solder all connections and cut off excess leads.

PROCEED TO PICTORIAL 1-10

PICTORIAL 1-9

START

NOTE: Solder the connections of each part or wire as it is installed. Cut off the excess leads of the neon lamp only.

( ) Install 9-pin tube sockets at V1, V4, V5, and V6.

( ) Install 7-pin tube sockets at V2 and V3.

( ) 2 megohm control (#10-161). Solder all five connections.

( ) 500 Ω control (#10-135). Solder all five connections.

NOTE: When a wire is called for in a step, cut the specified length from the yellow hookup wire. Then remove 1/4" of insulation from each end of the wire.

( ) 3-1/4" wire between holes X and Y.

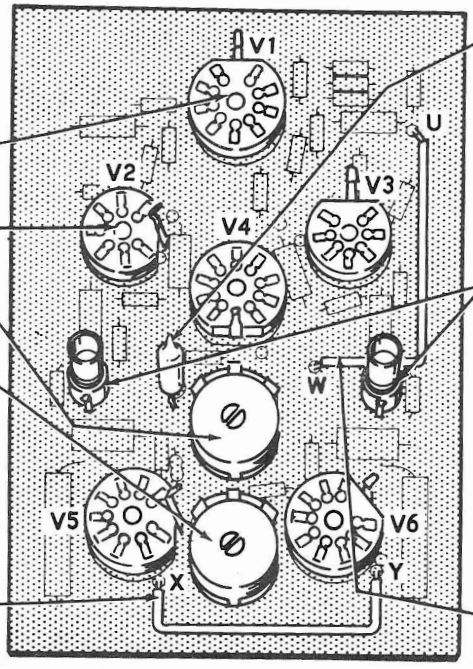

CONTINUE

( ) NE-2 neon lamp.

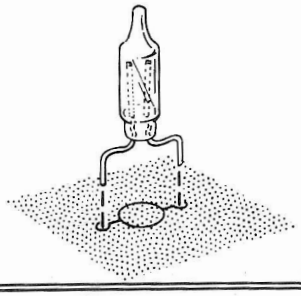

( ) Two driver peaking coils (#40-732).

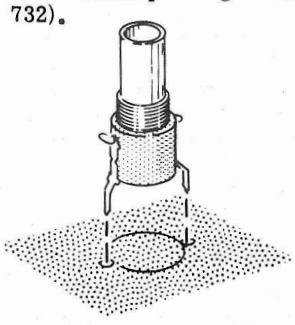

( ) 4" wire between holes U and W.

( ) Check to see that all connections are soldered, and the excess leads of the neon lamp are cut off.

FINISH

PROCEED TO PAGE 21.

PICTORIAL 1-10

HORIZONTAL CIRCUIT BOARD

PARTS LIST #5

Unpack package #5 and check each parts against the following Parts List. The numbers in parentheses are keyed to the numbers in the Parts Pictorial.

PART No.	PARTS Per Kit	DESCRIPTION
RESISTORS		
1/2 Watt		
(1) 1-1	13	47 Ω (yellow-violet-black)
1-3	4	100 Ω (brown-black-brown)
1-52	1	680 Ω 5% (blue-gray-brown)
1-16	1	4700 Ω (yellow-violet-red)
1-116	1	6200 Ω 5% (blue-red-red)
1-23	1	27 KΩ (red-violet-orange)
1-24	1	33 KΩ (orange-orange-orange)
1-67	1	39 KΩ (orange-white-orange)
1-25	2	47 KΩ (yellow-violet-orange)
1-26	1	100 KΩ (brown-black-yellow)
1-27	1	150 KΩ (brown-green-yellow)
1-31	1	330 KΩ (orange-orange-yellow)
1-33	1	470 KΩ (yellow-violet-yellow)
1-36	1	1.5 megohm (brown-green-green)
1-38	1	3.3 megohm (orange-orange-green)
1 Watt		
(2) 1-2-1	1	1000 Ω (brown-black-red)
1-25-1	1	6800 Ω (blue-gray-red)
1-27-1	2	33 KΩ (orange-orange-orange)
1-7-1	1	47 KΩ (yellow-violet-orange)
1-28-1	1	100 KΩ (brown-black-yellow)
2 Watt		
(3) 1-3-2	1	10 KΩ (brown-black-orange)
1-4-2	3	15 KΩ (brown-green-orange)

PART No.	PARTS Per Kit	DESCRIPTION
CAPACITORS		
Disc		
(4) 21-78	1	5 μμf
21-14	1	.001 μfd
21-31	1	.02 μfd
Trimmer		
(5) 31-13	1	3-12 μμf
GENERAL		
(6) 10-135	1	500 Ω tab mount control
10-178	1	2000 Ω tab mount control
10-165	1	100 KΩ tab mount control
(7) 412-11	1	NE-2 neon lamp
(8) 431-73	1	Single-hole insulator
(9) 434-129	1	7-pin tube socket
434-130	7	9-pin tube socket
ITEM FROM PACK #8		
85-141-2	1	Horizontal circuit board

PARTS PICTORIAL

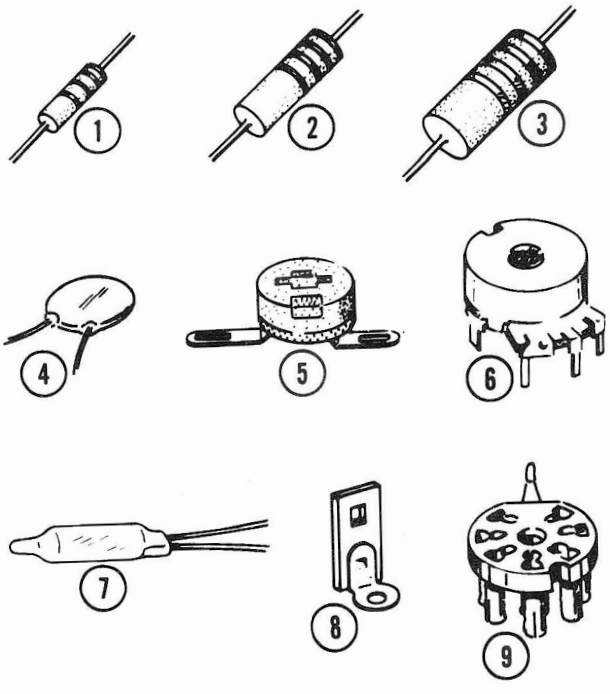

STEP-BY-STEP ASSEMBLY

Only a portion of the horizontal circuit board is shown in each of the next two Pictorials because of the large size of the circuit board. A small drawing at the top of each Pictorial shows the area of the circuit board to be assembled.

Position the horizontal circuit board (#85-141-2) lettered side up as shown in Pictorial 1-11. Complete each step on the Pictorial.

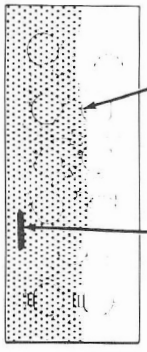

The steps performed in Pictorial 1-11 are in this area of the circuit board.

#85-141-2

START

( ) 47 Ω (yellow-violet-black).

( ) 33 KΩ 1 watt (orange-orange-orange).

( ) 47 Ω (yellow-violet-black).

( ) 330 KΩ (orange-orange-yellow).

( ) 47 KΩ 1 watt (yellow-violet-orange).

( ) 1000 Ω 1 watt (brown-black-red).

( ) 1.5 megohm (brown-green-green).

( ) Solder all connections and cut off excess leads.

( ) 470 KΩ (yellow-violet-yellow).

( ) .001 μfd disc.

( ) 47 Ω (yellow-violet-black).

( ) 47 Ω (yellow-violet-black).

( ) 100 Ω (brown-black-brown).

( ) 100 Ω (brown-black-brown).

( ) Solder all connections and cut off excess leads.

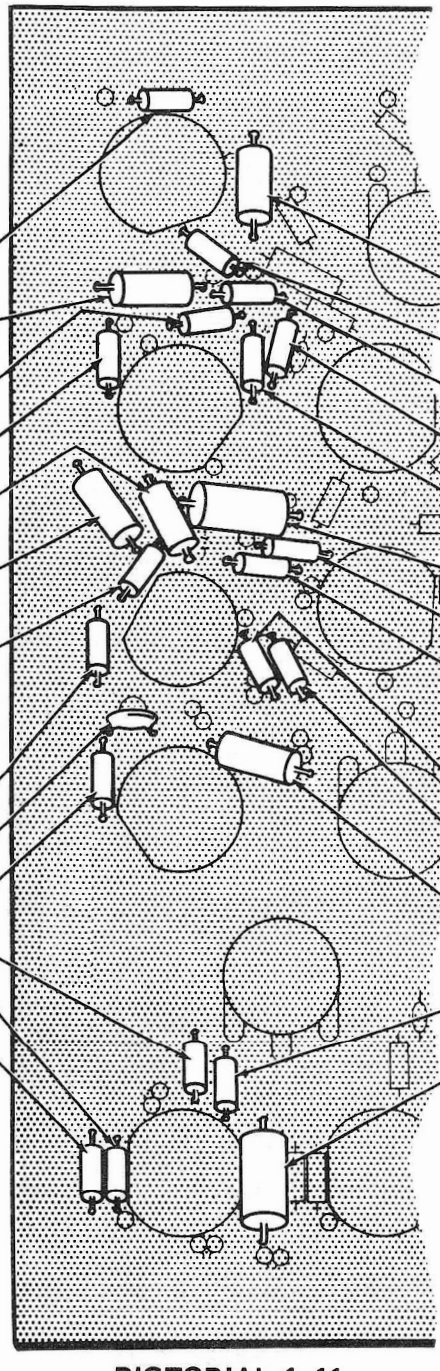

CONTINUE

( ) 33 KΩ 1 watt (orange-orange-orange).

( ) 47 Ω (yellow-violet-black).

( ) 33 KΩ (orange-orange-orange).

( ) 47 Ω (yellow-violet-black).

( ) 47 Ω (yellow-violet-black).

( ) 10 KΩ 2 watt (brown-black-orange).

( ) 4700 Ω (yellow-violet-red).

( ) 39 KΩ (orange-white-orange).

( ) Solder all connections and cut off excess leads.

( ) 47 Ω (yellow-violet-black).

( ) 6200 Ω (blue-red-red) 5%.

( ) 100 KΩ 1 watt (brown-black-yellow).

( ) 680 Ω 5% (blue-gray-brown).

( ) 15 KΩ 2 watt (brown-green-orange).

( ) Solder all connections and cut off excess leads.

PROCEED TO PICTORIAL 1-12

PICTORIAL 1-11

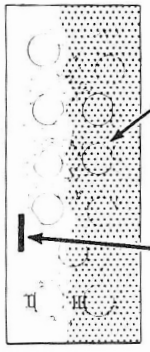

START

( ) 47 Ω (yellow-violet-black).

( ) 6800 Ω 1 watt (blue-gray-red).

( ) 47 KΩ (yellow-violet-orange).

( ) 5 μμf disc.

( ) 47 Ω (yellow-violet-black).

( ) 3.3 megohm (orange-orange-green).

( ) 47 Ω (yellow-violet-black).

( ) 100 Ω (brown-black-brown).

( ) 100 Ω (brown-black-brown).

( ) Solder all connections and cut off excess leads.

CONTINUE

( ) 150 KΩ (brown-green-yellow).

( ) 47 KΩ (yellow-violet-orange).

( ) 100 KΩ (brown-black-yellow).

( ) 27 KΩ (red-violet-orange).

( ) 47 Ω (yellow-violet-black).

( ) 47 Ω (yellow-violet-black).

( ) 15 KΩ 2 watt (brown-green-orange).

( ) .02 μfd disc.

( ) 15 KΩ 2 watt (brown-green-orange).

( ) Solder all connections and cut off excess leads.

PROCEED TO PICTORIAL 1-13

PICTORIAL 1-12

START

NOTE: Solder the connections of each part or wire as it is installed. Cut off the excess leads of the neon lamp and wires only.

( ) Install a 7-pin tube socket at V10.

( ) Install 9-pin tube sockets at the seven other tube socket locations. NOTE: Do not solder the center pin (marked D on foil side) of tube socket V14 at this time. It will be soldered later.

( ) 1-1/8" wire between holes AR and AS.

( ) 100 KΩ control (#10-165). Solder all five connections.

( ) 2" wire between holes AE and AF.

( ) NE-2 neon lamp.

( ) 1-3/8" wire between holes AB and AC.

( ) 2" wire between holes S and U.

( ) 2000 Ω control (#10-178). Solder all five connections.

( ) 500 Ω control (#10-135). Solder all five connections.

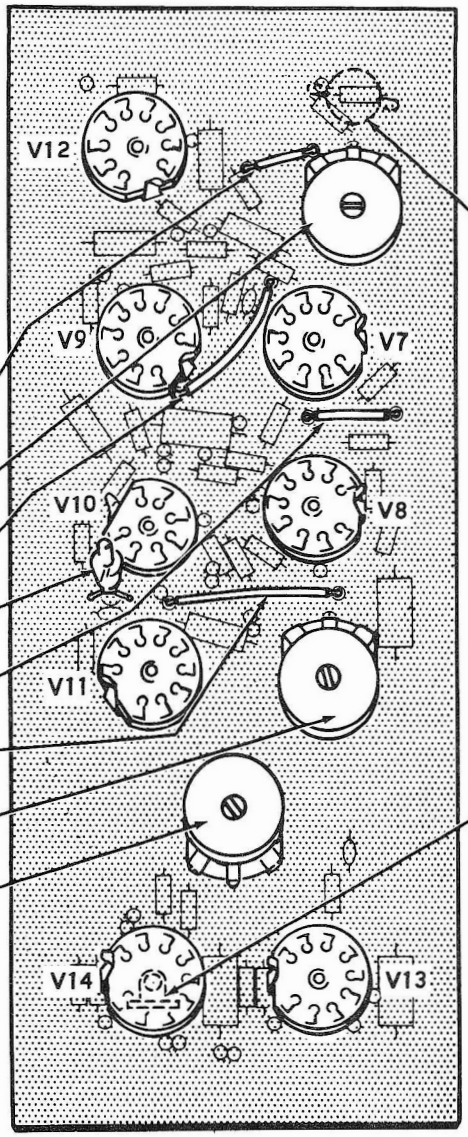

CONTINUE

NOTE: The next two parts are installed on the foil side of the circuit board.

( ) Cut 1/8" off the indicated lug of trimmer capacitor #31-13. Install the trimmer between foils A and B. Position the "Y" of the trimmer as shown. Solder the trimmer lugs directly to the foil. Be sure the trimmer lugs do not touch any other foils.

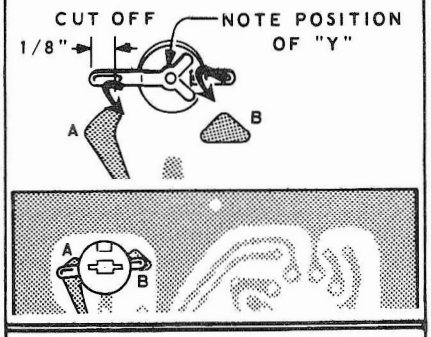

( ) Install a single hole insulator at D (center pin of tube socket V14). Position the insulator as shown. Solder the insulator mounting foot directly to the foil and tube socket pin.

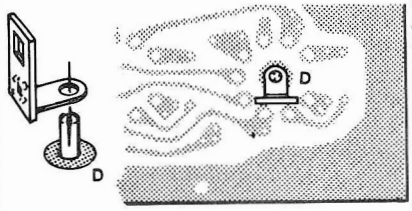

( ) Check to see that all connections are soldered.

FINISH

PROCEED TO PAGE 27

PICTORIAL 1-13

FRONT AND REAR PANELS

This section of the Manual contains the Parts List and Step-By-Step Assembly instructions for the assembly and wiring of the front and rear panels.

PARTS LIST #6

Unpack package #6 and check each part against the following Parts List. The numbers in parentheses are keyed to the numbers in the Parts Pictorial (fold-out from Page 29).

PART No.	PARTS Per Kit	DESCRIPTION
RESISTORS		
1/2 Watt		
(1) 1-3	4	100 Ω (brown-black-brown)
1-19	1	6800 Ω (blue-gray-red)
1-60	2	68 KΩ (blue-gray-orange)
1-26	2	100 KΩ (brown-black-yellow)
1-27	1	150 KΩ (brown-green-yellow)
1-30	1	270 KΩ (red-violet-yellow)
1-31	1	330 KΩ (orange-orange-yellow)
1-33	1	470 KΩ (yellow-violet-yellow)
1-35	3	1 megohm (brown-black-green)
1-38	1	3.3 megohm (orange-orange-green)
1 Watt		
(2) 1-36-1	1	2.2 megohm (red-red-green)
1-42-1	1	5.6 megohm (green-blue-green)
Precision		
(3) 2-207	1	10.1 KΩ
2-11	1	100 KΩ
2-208	1	111 KΩ
2-54	3	200 KΩ
2-211	1	333 KΩ
2-76	2	500 KΩ
2-212	1	750 KΩ
2-123	2	800 KΩ
2-51	1	900 KΩ
2-210	1	990 KΩ
2-14	3	1 megohm
2-55	1	2 megohm
2-80	1	5 megohm

PART No.	PARTS Per Kit	DESCRIPTION
CAPACITORS		
Mica		
(4) 20-101	1	47 μμf
20-110	1	75 μμf
20-102	1	100 μμf
20-105	1	180 μμf
20-126	1	255 μμf
(5) 20-17	1	1000 μμf 1%
Disc		
(6) 21-33	1	3.3 μμf
21-14	1	.001 μfd
21-36	1	.002 μfd
21-16	1	.01 μfd
21-31	3	.02 μfd
Tubular		
(7) 23-101	1	.015 μfd 3 KV
23-47	1	.1 μfd
Resin		
(8) 27-53	1	.01 μfd 1%
27-52	1	.1 μfd 1%
27-34	1	.2 μfd
27-51	1	1 μfd 1%

PART No.	PARTS Per Kit	DESCRIPTION
Trimmer		
(9) 31-44	3	1.5-7 μμf
31-45	2	3-12 μμf
31-10	5	4.5-25 μμf
CONTROLS		
(10) 10-58	2	100 KΩ tab mount
(11) 10-55	3	100 KΩ
10-176	1	500 KΩ
10-177	1	1 megohm
(12) 12-70	1	100 KΩ/500 KΩ dual
19-98	1	50 Ω w/SPST switch
19-99	1	500 Ω w/DPST switch
SWITCHES		
(13) 60-24	2	SPST rocker (2 lugs)
60-25	1	DPDT rocker (6 lugs)
60-28	1	TPDT rocker (9 lugs)
(14) 63-412	1	3-position 1-wafer rotary
63-414	1	3-position 2-wafer rotary w/control
63-415	1	4-position 2-wafer rotary w/dual control
63-413	1	6-position 3-wafer rotary
63-416	1	9-position 4-wafer rotary

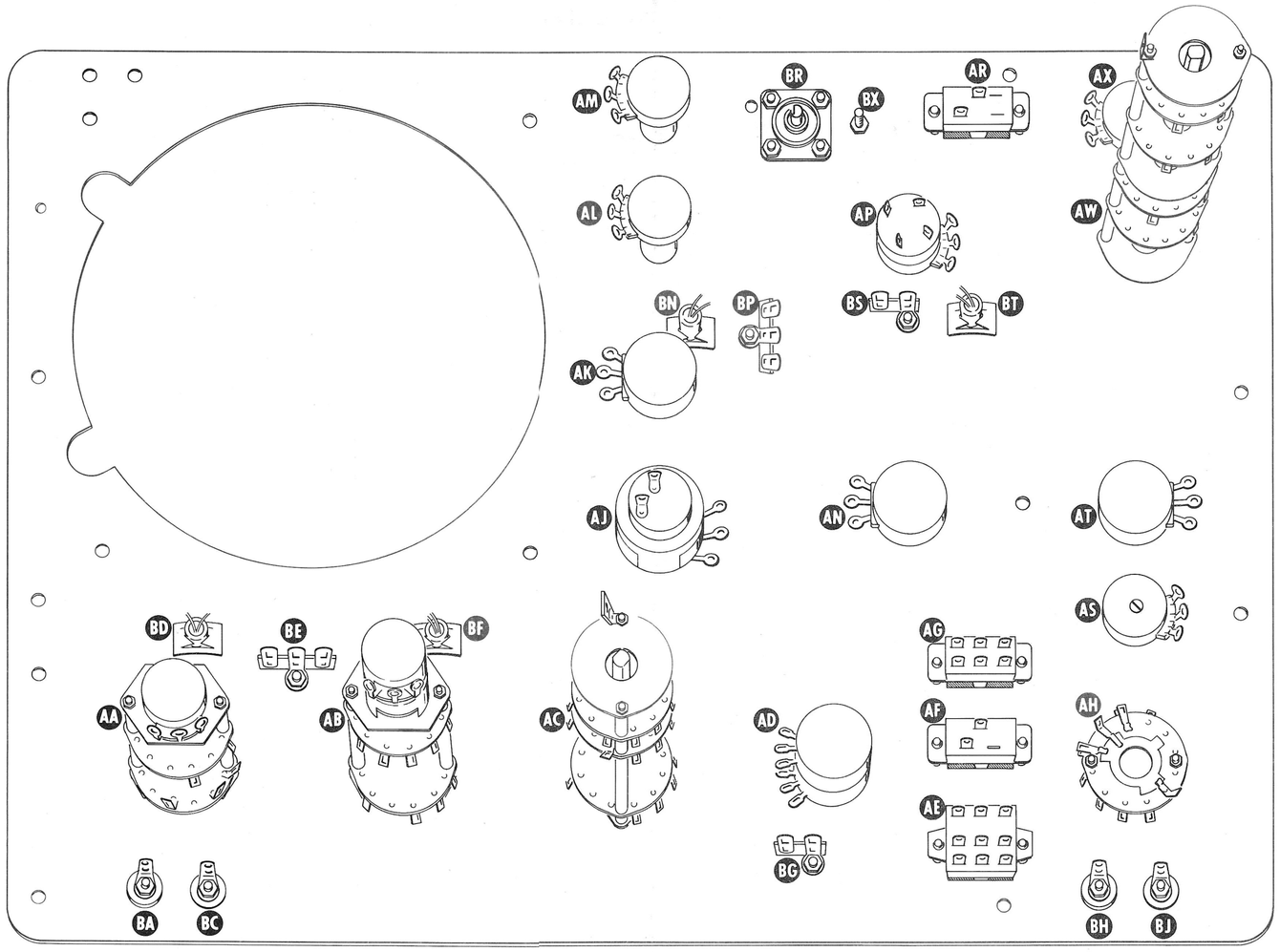

PICTORIAL 2-10

PART No.	PARTS Per Kit	DESCRIPTION
INSULATORS-CLAMPS-TERMINAL STRIPS		
(15) 75-17	9	Binding post base insulator
(16) 207-4	1	1/4" plastic cable clamp
207-19	1	5/16" plastic cable clamp
(17) 255-55	2	Phenolic tapped insulator
(18) 431-73	1	Single-hole insulator
(19) 431-14	2	2-lug terminal strip
431-10	2	3-lug terminal strip
GENERAL		
(20) 204-9	1	Angle bracket
(21) 204-699	1	Long L bracket
343-7	1	Small coaxial cable
345-1	1	Flat braid
(22) 412-36	4	NE-2E neon lamp
420-36	1	Fan assembly
(23) 436-5	1	Coaxial connector
(24) 413-10	1	Red lens
413-11	3	Clear lens
HARDWARE		
#4 Hardware		
(25) 250-273	4	4-40 x 3/8" screw
(26) 252-2	4	4-40 nut
(27) 254-9	4	#4 lockwasher
#6 Hardware		
(28) 250-56	4	6-32 x 1/4" screw
(29) 250-26	12	6-32 x 5/8" screw
(30) 252-3	18	6-32 nut
(31) 253-45	3	5/32" ID flat washer

PART No.	PARTS Per Kit	DESCRIPTION
#6 Hardware (cont'd.)		
(32) 254-1	13	#6 lockwasher
(33) 255-3	8	#6 x 3/8" spacer
(34) 259-1	6	#6 solder lug
(35) 427-3	7	6-32 binding post base
#8 Hardware		
(36) 250-137	2	8-32 x 3/8" screw
(37) 252-4	2	8-32 nut
(38) 254-2	2	#8 lockwasher
Other Hardware		
(39) 252-7	11	3/8-32 control nut
(40) 252-32	4	Push-on nut
(41) 254-5	3	3/8" control lockwasher
(42) 455-53	2	3/8-32 double bushing
ITEMS FROM PACK #8		
344-13	1	Large blue hookup wire
344-50	1	Black hookup wire
344-51	1	Brown hookup wire
344-53	1	Orange hookup wire
344-55	1	Green hookup wire
344-59	1	White hookup wire
346-1	1	Sleeving
(43) 203-435	1	Front subpanel
(44) 203-437-1	1	Rear panel

PARTS PICTORIAL

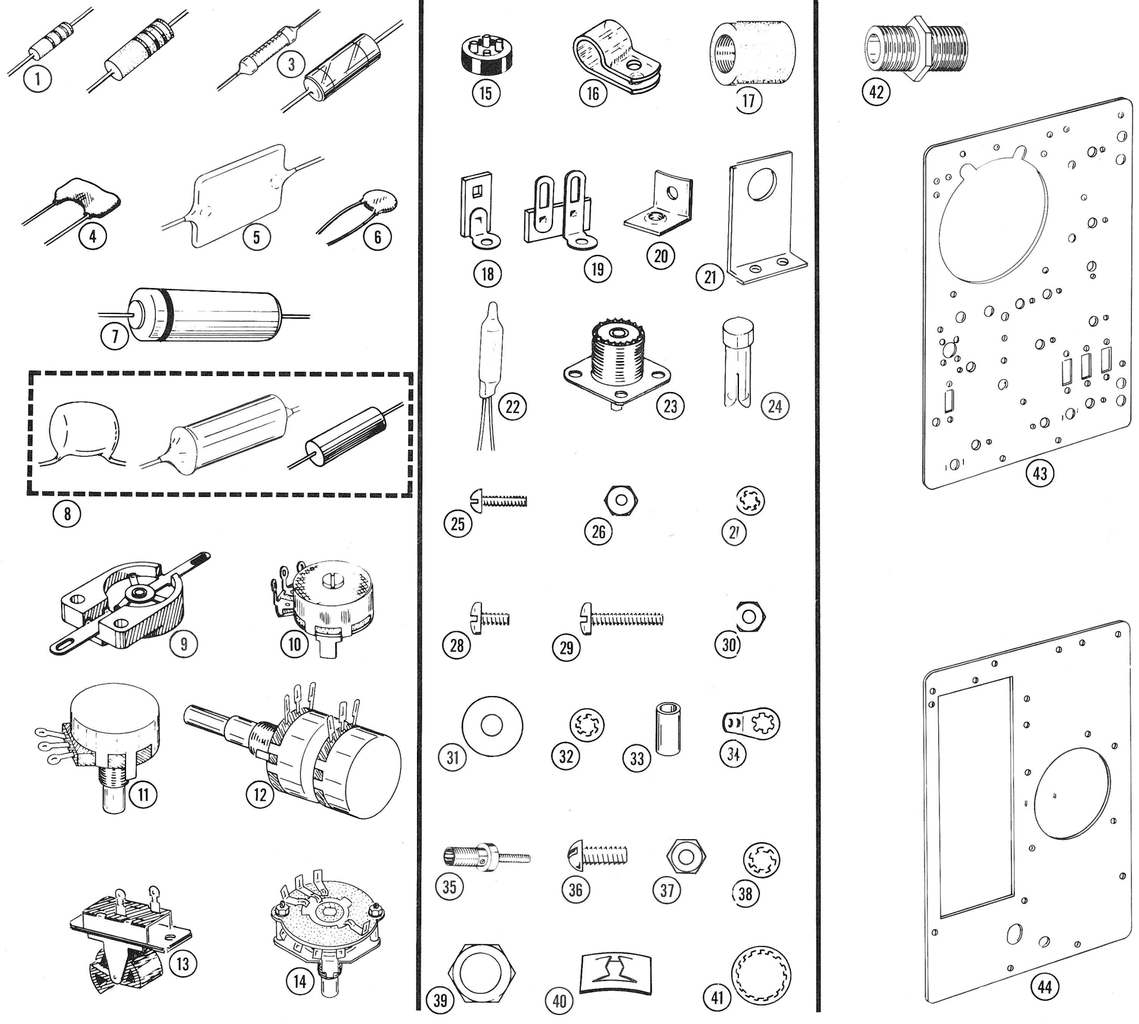

STEP-BY-STEP ASSEMBLY

Since the drawings in the Manual may be slightly distorted to show all the parts clearly, it might be helpful to look at the Chassis Photos (Page 134) from time-to-time to see the actual positioning of wires and components.

NOTE: The front panel switches are easier to wire if they are temporarily mounted in one of the holes of the front subpanel with a 3/8-32 control nut. Position each switch as shown in the Pictorial. After a switch is completed, remove it from the front subpanel and set it aside until it is called for later.

WIRING SWITCH AA (#63-414)

Refer to Pictorial 2-1 for the following steps.

NOTE: To make it easier to locate the lugs, each lug location (hole) of the rotary switches will be given a number, even though every hole does not have a lug.

( ) Place a 3/8" length of sleeving on one lead and a 1" length of sleeving on the other lead of a 200 KΩ precision resistor. Connect the lead with the 1" length of sleeving to lug 10 of the rear wafer (NS), and connect the other lead to lug 3 of the control (NS).

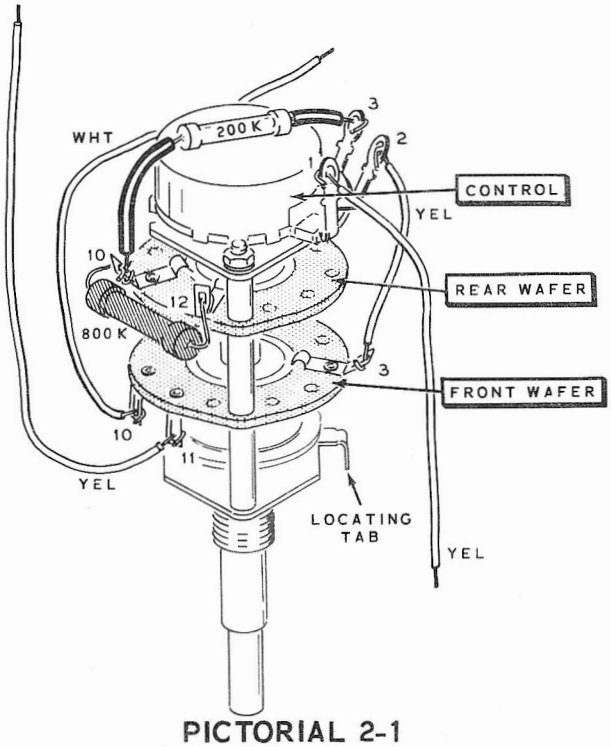

PICTORIAL 2-1

( ) Connect an 800 KΩ precision resistor between lugs 10 (S-2) and 12 (NS) of the rear wafer.

NOTE: Use small hookup wire of the color called out in the step unless large red or large blue wire is specified. In steps calling for only one end of a wire to be connected, the other end of the wire will be left free to be connected later.

If you wish, the following lengths of hookup wire may be prepared ahead of time. To prepare a wire, cut it to the specified length; then remove 1/4" of insulation from each end. The wire lengths are listed in the order in which they will be used.

( ) Prepare the following lengths of hookup wire:

COLOR	LENGTH
White	4-1/2"
Yellow	5-1/2"
Yellow	1-1/2"
Yellow	2-1/2"
Yellow	4-1/4"
Black	2-1/2"

NOTE: It is very important that all components and wires be positioned as shown in the Pictorials.

( ) Connect one end of a 4-1/2" white wire to 10 of the front wafer (S-1).

( ) Connect one end of a 5-1/2" yellow wire to lug 11 of the front wafer (S-1).

( ) Connect one end of a 1-1/2" yellow wire from lug 2 of the control (S-1) to lug 3 on the front wafer (S-1).

( ) Connect one end of a 2-1/2" yellow wire to lug 1 of the control (S-1).

Refer to Pictorial 2-2 for the following steps.

( ) Turn the switch 180 degrees to the position shown.

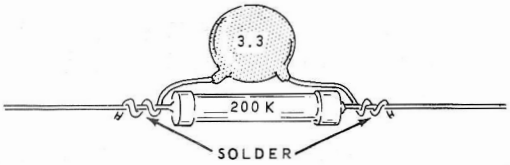

Detail 2-2A

( ) Connect one end of a 4-1/4" yellow wire to lug 6 of the front wafer (S-1).

( ) Pass one lead of an 800 KΩ precision resistor through lug 6 of the rear wafer (NS) to lug 5 of the front wafer (S-1). Connect the other lead to lug 4 of the rear wafer (NS). Be sure to position the body of the resistor as shown between the rear wafer of the switch and the control.

( ) Refer to Detail 2-2A, and prepare a resistor-capacitor combination. Use a 200 KΩ precision resistor and a 3.3 μμf disc capacitor.

( ) Cut one lead of this resistor-capacitor combination to 1/4". Connect this 1/4" lead to lug 4 of the rear wafer (NS). The other lead will be connected later.

( ) Refer to Detail 2-2B, and bend the lugs of a 1.5-7 μμf trimmer capacitor (#31-44) as shown. Use care in bending the lugs, as the trimmer can be broken.

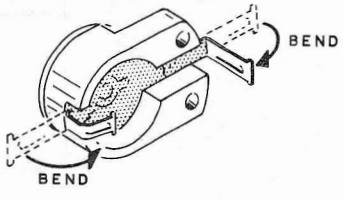

Detail 2-2B

NOTE: It is much easier to mount a trimmer on a switch, as in the following step, if the lugs of the switch are soldered first. Then solder the trimmer to the switch lugs. This will also insure good solder connections of any component leads already connected to these lugs.

( ) Connect this trimmer between lugs 4 (S-3) and 6 (S-3) of the rear wafer. See the inset drawing on the Pictorial. NOTE: Where a wire passes through a connection and then goes to another point (as at lug 6) it will count as two wires, one entering and one leaving the connection.

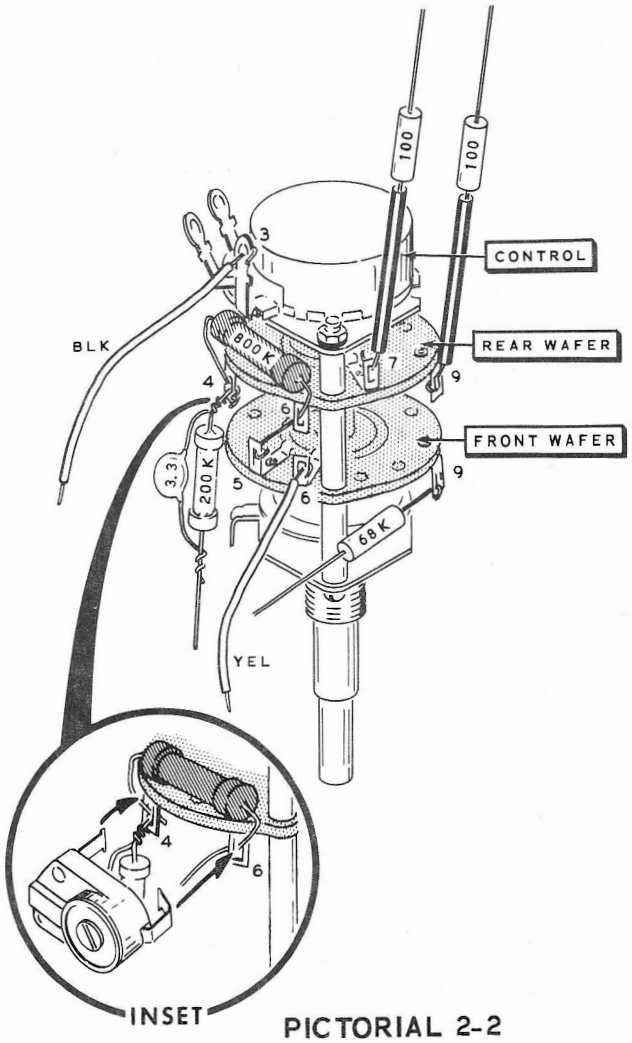

PICTORIAL 2-2

( ) Place a 1" length of sleeving on one lead of a 100 Ω (brown-black-brown) resistor. Connect this lead to lug 9 of the rear wafer (S-1). The other lead will be connected later.

( ) Place a 1" length of sleeving on one lead of a 100 Ω (brown-black-brown) resistor. Connect this lead to lug 7 of the rear wafer (S-1). The other lead will be connected later.

( ) Cut one lead of a 68 KΩ (blue-gray-orange) resistor to 1/2". Connect this lead to lug 9 of the front wafer (S-1). The other lead will be connected later.

( ) Connect one end of a 2-1/2" black wire to lug 3 of the control (S-2).

This completes the wiring to this switch. All connections except lug 12 of the rear wafer should be soldered.

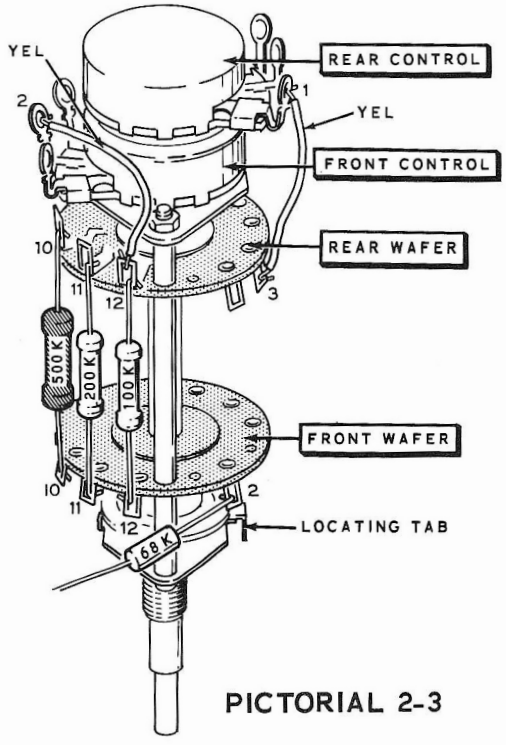

PICTORIAL 2-3

WIRING SWITCH AB (#63-415)

Refer to Pictorial 2-3 for the following steps.

( ) Connect a 500 KΩ precision resistor from lug 10 of the front wafer (S-1) to lug 10 of the rear wafer (S-1).

( ) Connect a 200 KΩ precision resistor from lug 11 of the front wafer (S-1) to lug 11 of the rear wafer (S-1).

( ) Connect a 100 KΩ precision resistor from lug 12 of the rear wafer (NS) to lug 12 of the front wafer (S-1).

( ) Cut one lead of a 68 KΩ (blue-gray-orange) resistor to 1/2". Connect this lead to lug 2 of the front wafer (S-1). The other lead will be connected later.

( ) Prepare the following lengths of hookup wire:

COLOR	LENGTH
Yellow	1-3/4"
Yellow	1-3/4"
White	5-1/2"
Yellow	2-1/2"
Brown	2-3/4"

( ) Connect a 1-3/4" yellow wire from lug 2 of the front control (S-1) to lug 12 of the rear wafer (S-2).

( ) Connect a 1-3/4" yellow wire from lug 1 of the rear control (S-1) to lug 3 of the rear wafer (S-1).

Refer to Pictorial 2-4 for the following steps.

( ) Turn the switch 180 degrees to the position shown.

( ) Connect a 5 megohm precision resistor from lug 4 of the front wafer (NS) to lug 4 of the rear wafer (S-1).

( ) Connect a 2 megohm precision resistor from lug 5 on the front wafer (NS) to lug 5 on the rear wafer (S-1).

( ) Connect a 1 megohm precision resistor from lug 6 of the front wafer (S-1) to lug 6 of the rear wafer (NS).

( ) Connect one end of a 5-1/2" white wire to lug 5 of the front wafer (S-2).

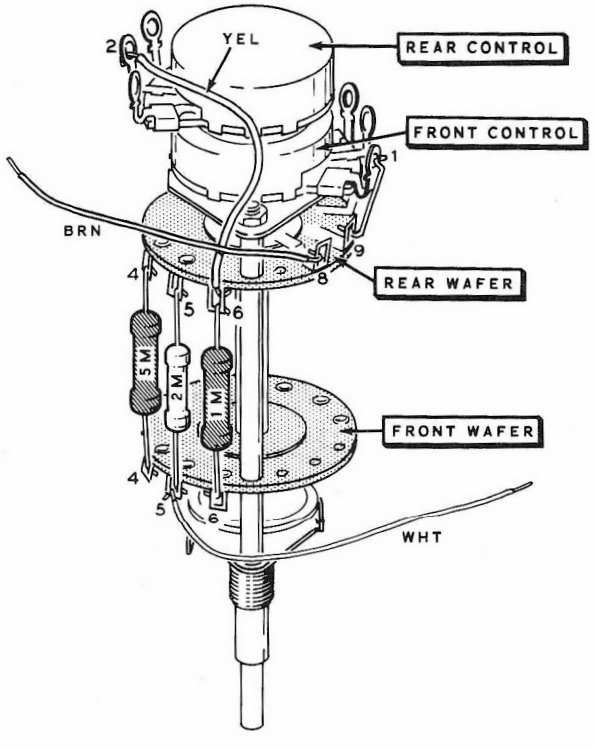

PICTORIAL 2-4

( ) Connect a 2-1/2" yellow wire from lug 2 of the rear control (S-1) to lug 6 of the rear wafer (S-2).

( ) Connect a 1" bare wire (a cutoff resistor lead) from lug 9 of the rear wafer (S-1) to lug 1 of the front control (S-1).

( ) Connect one end of a 2-3/4" brown wire to lug 8 of the rear wafer (S-1).

This completes the wiring of this switch. All connections except lug 4 of the front wafer and lug 2 of the rear wafer should be soldered.

WIRING SWITCH AC (#63-413)

Refer to Pictorial 2-5 for the following steps.

( ) Refer to Detail 2-5A, and prepare a mica capacitor and trimmer capacitor combination. Use a 75 μμf mica capacitor and a 4.5-25 μμf trimmer capacitor (#31-10). Position the mica capacitor as shown so it will not short across the lugs of the trimmer capacitor. Do not cut off the excess mica capacitor leads at this time.

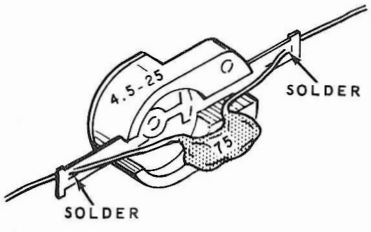

Detail 2-5A

( ) Connect this capacitor combination from lug 10 of the middle wafer (S-1) to lug 10 of the front wafer (S-1).

( ) Connect a 3.3 megohm (orange-orange-green) resistor between lugs 10 (S-1) and 12 (NS) of the rear wafer.

( ) Prepare the following lengths of hookup wire:

COLOR	LENGTH
White	5-3/4"
Black	7"
Yellow	9-1/2"
Yellow	7-1/2"
Brown	3-3/4"

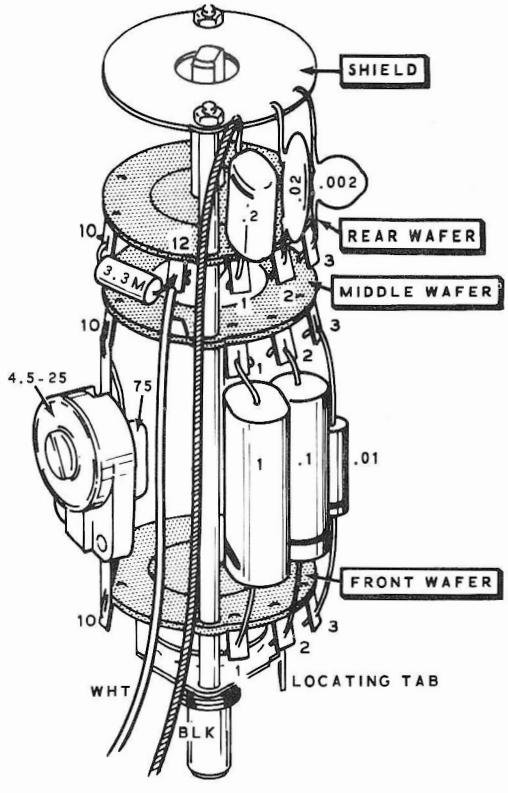

PICTORIAL 2-5

( ) Connect a 1 μfd 1% resin capacitor from lug 1 of the front wafer (S-1) to lug 1 of the middle wafer (S-1).

( ) Connect a .1 μfd 1% resin capacitor from lug 2 of the front wafer (S-1) to lug 2 of the middle wafer (S-1).

( ) Connect a .01 μfd 1% resin capacitor from lug 3 of the front wafer (S-1) to lug 3 of the middle wafer (S-1).

( ) Connect a .2 μfd resin capacitor from lug 1 of the rear wafer (S-1) to the shield (S-1).

( ) Connect a .02 μfd disc capacitor from lug 2 of the rear wafer (S-1) to the shield (S-1).

( ) Connect a .002 μfd disc capacitor from lug 3 of the rear wafer (S-1) to the shield (S-1).

( ) Connect one end of a 5-3/4" white wire to lug 12 of the rear wafer (NS).

( ) Connect one end of a 7" black wire to the shield at the location shown (S-1).

Refer to Pictorial 2-6 for the following steps.

( ) Turn the switch 180 degrees to the position shown.

( ) Connect a 1000 $\mu\mu$f mica capacitor from lug 4 of the front wafer (S-1) to lug 4 of the middle wafer (S-1).

( ) Connect a 180 $\mu\mu$f mica capacitor from lug 4 of the rear wafer (S-1) to the shield (S-1).

( ) Connect one end of a 9-1/2" yellow wire to lug 9 of the front wafer (S-1).

( ) Connect a 100 $\mu\mu$f mica capacitor from lug 9 of the rear wafer (NS) to the shield (S-1).

( ) Connect one end of a 7-1/2" yellow wire to lug 9 of the rear wafer (S-2).

( ) Refer to Detail 2-6A, and prepare both ends of an 8" length of small coaxial cable.

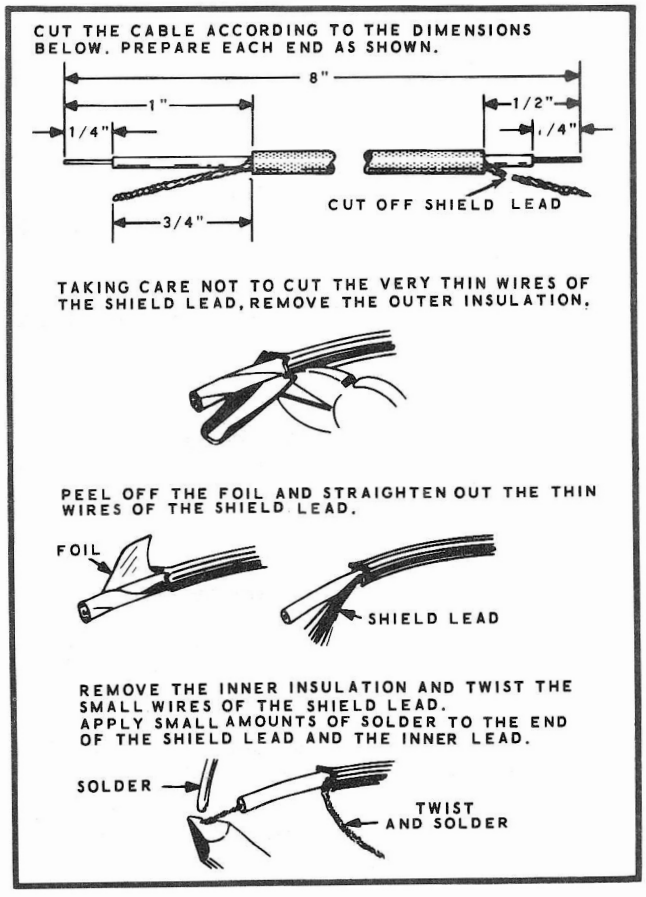

Detail 2-6A

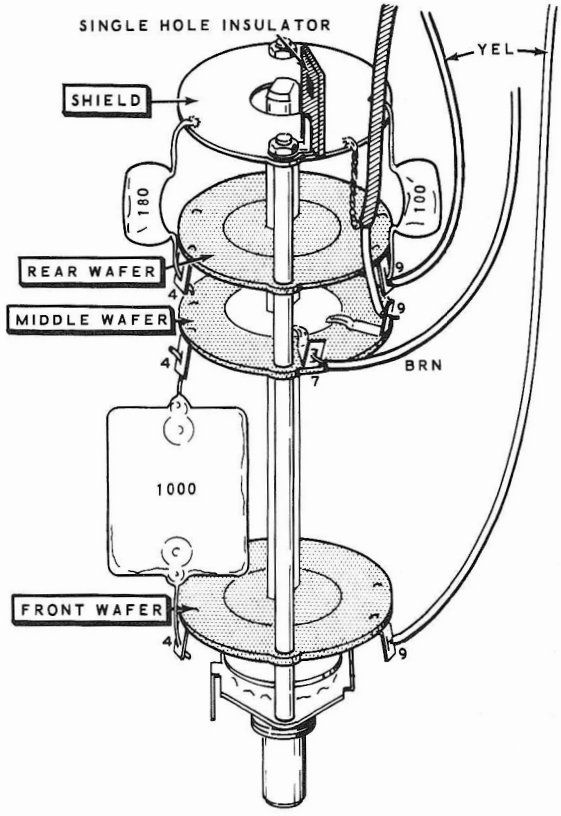

PICTORIAL 2-6

( ) At the end of the 8" cable that has the shield, connect the inner lead to lug 9 of the middle wafer (S-1). Then connect the shield on the cable to the shield of the switch at the location shown (S-1).

( ) Connect one end of a 3-3/4" brown wire to lug 7 of the middle wafer (S-1).

( ) Remove the switch assembly nut and lockwasher that is located between lug positions 6 and 7 of the switch.

( ) Mount a single-hole insulator at this location and replace the lockwasher and nut. Position the insulator as shown.

This completes the assembly of this switch. All connections except lugs 12 of the middle and rear wafers should be soldered.

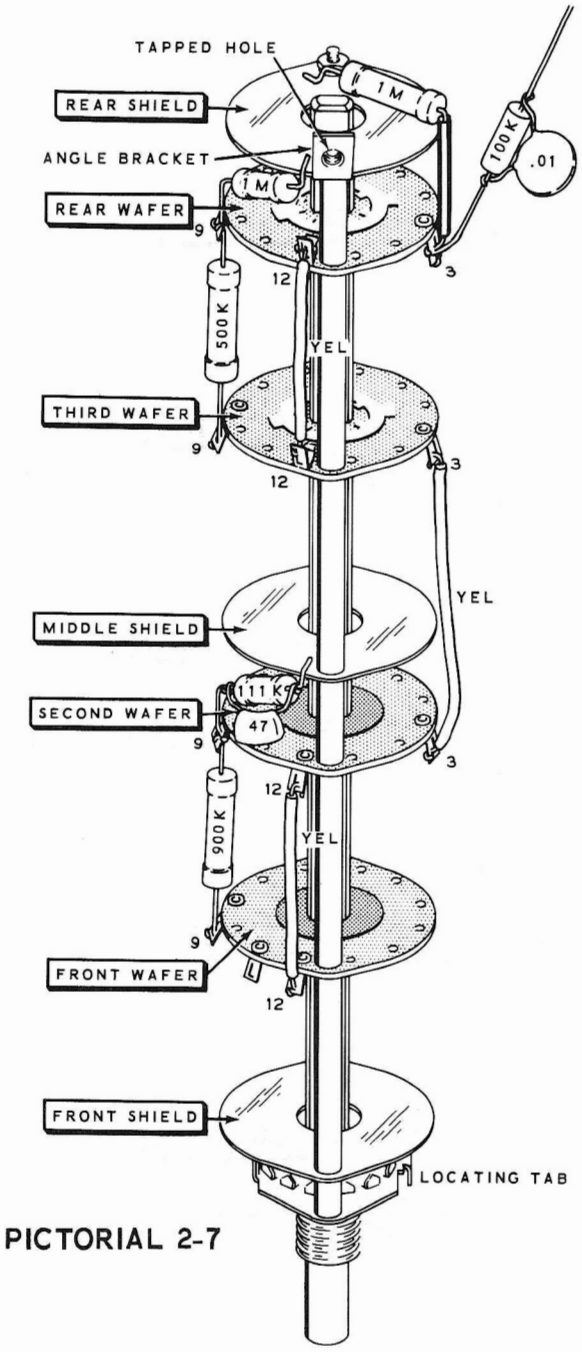

PICTORIAL 2-7

WIRING SWITCH AW (#63-416)

Refer to Pictorial 2-7 for the following steps.

( ) Remove the switch assembly nut and lockwasher that is between lug positions 1 and 12 of the switch.

( ) Mount the angle bracket at this location and replace the lockwasher and nut. Be sure not to use the tapped hole. Position the angle bracket as shown; then solder it to the rear shield.

( ) Connect a 900 KΩ precision resistor from lug 9 of the front wafer (NS) to lug 9 of the second wafer (NS).

( ) Prepare the following lengths of hookup wire:

COLOR	LENGTH
Yellow	1-1/2"
Yellow	1-1/2"
Yellow	2"

( ) Connect a 1-1/2" yellow wire from lug 12 of the front wafer (S-1) to lug 12 of the second wafer (S-1).

( ) Prepare a resistor-capacitor combination using a 111 KΩ precision resistor and a 47 μμf mica capacitor.

( ) Connect this resistor-capacitor combination from lug 9 of the second wafer (NS) to the middle shield (S-1).

( ) Connect a 500 KΩ precision resistor from lug 9 of the third wafer (NS) to lug 9 of the rear wafer (NS).

( ) Connect a 1 megohm precision resistor from lug 9 of the rear wafer (NS) to the rear shield (S-1).

( ) Connect a 1-1/2" yellow wire from lug 12 of the third wafer (S-1) to lug 12 of the rear wafer (S-1).

( ) Connect a 2" yellow wire from lug 3 of the second wafer (S-1) to lug 3 of the third wafer (S-1).

( ) Place a 3/4" length of sleeving on one lead of a 1 megohm precision resistor. Connect this lead to lug 3 of the rear wafer (NS). Connect the other lead to the rear shield (S-1).

( ) Prepare a resistor-capacitor combination using a 100 KΩ (brown-black-yellow) resistor and a .01 μfd disc capacitor.

( ) Cut one lead of this resistor-capacitor combination to 1". Connect this lead to lug 3 of the rear wafer (S-2). The other end will be connected later.

Refer to Pictorial 2-8 for the following steps.

( ) Turn the switch 180 degrees to the position shown.

( ) Connect a 990 KΩ precision resistor from lug 6 of the front wafer (NS) to lug 6 of the second wafer (NS).

( ) Prepare a resistor-capacitor combination using a 10.1 KΩ precision resistor and a 255 μμf mica capacitor.

( ) Connect this resistor-capacitor combination from lug 6 of the second wafer (NS) to the middle shield (S-1).

( ) Connect a 750 KΩ precision resistor from lug 5 of the third wafer (NS) to lug 5 of the rear wafer (NS).

( ) Connect a 333 KΩ precision resistor from lug 5 of the rear wafer (NS) to the rear shield (S-1).

Remove the switch from the front subpanel.

( ) Connect a 6-1/4" length of flat braid from the front shield (S-1) to the rear shield (S-1). Position the braid in a straight line directly between the number 7 and 8 hole positions of the switch wafers. Now, solder the braid to the middle shield (S-1).

Refer to Pictorial 2-9 for the following steps.

( ) Refer to inset drawing #2, and bend the indicated lug of a 4.5-25 μμf trimmer capacitor (#31-10) as shown.

NOTE: To insure good solder connections and to make it easier to mount the trimmers on the switch, the switch lugs should be soldered first. Then solder the trimmers to the switch lugs. Be careful not to use too much solder, as it can flow into the contacts and damage the switch.

( ) Connect this trimmer capacitor from lug 6 of the front wafer (NS) to the front shield (S-1). The bent lug connects to the shield.

( ) Refer to inset drawing #1, and bend both lugs of a 1.5-7 μμf trimmer capacitor (#31-44) as shown.

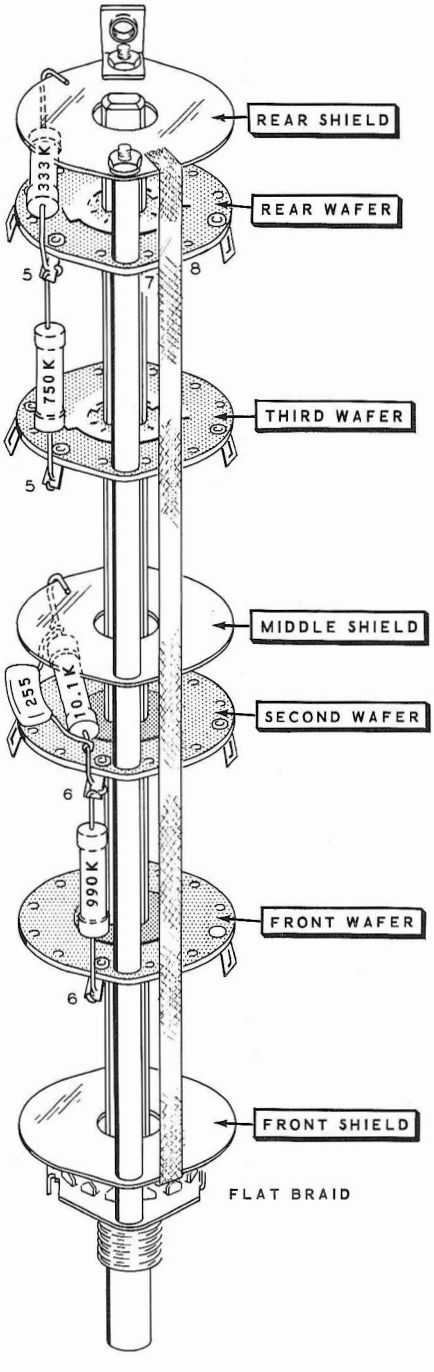

PICTORIAL 2-8

( ) Connect this trimmer from lug 6 of the front wafer (S-3) to lug 6 of the second wafer (S-3).

( ) Connect a 4.5-25 μμf trimmer capacitor (#31-10) from lug 5 of the third wafer (NS) to the middle shield (S-1). Bend the proper lug as shown in inset drawing #2.

( ) Connect a 1.5-7 μμf trimmer (#31-44) from lug 5 of the third wafer (S-3) to lug 5 of the rear wafer (S-3). Bend both lugs as shown in inset drawing #1.

( ) Connect a 3-12 μμf trimmer capacitor (#31-45) from lug 9 of the front wafer (NS) to the front shield (S-1). Bend the proper lug as shown in inset drawing #2.

( ) Connect a 3-12 μμf trimmer capacitor (#31-45) from lug 9 of the front wafer (S-3) to lug 9 of the second wafer (S-3). Bend both lugs as shown in inset drawing #1.

( ) Connect a 4.5-25 μμf trimmer capacitor (#31-10) from lug 9 of the third wafer (NS) to the middle shield (S-1). Bend the proper lug as shown in inset drawing #2.

( ) Connect a 4.5-25 μμf trimmer capacitor from lug 9 of the third wafer (S-3) to lug 9 of the rear wafer (S-3). Bend both lugs as shown in the inset drawing #1.

This completes the wiring of this switch. All connections except lug 11 of the front wafer should be soldered.

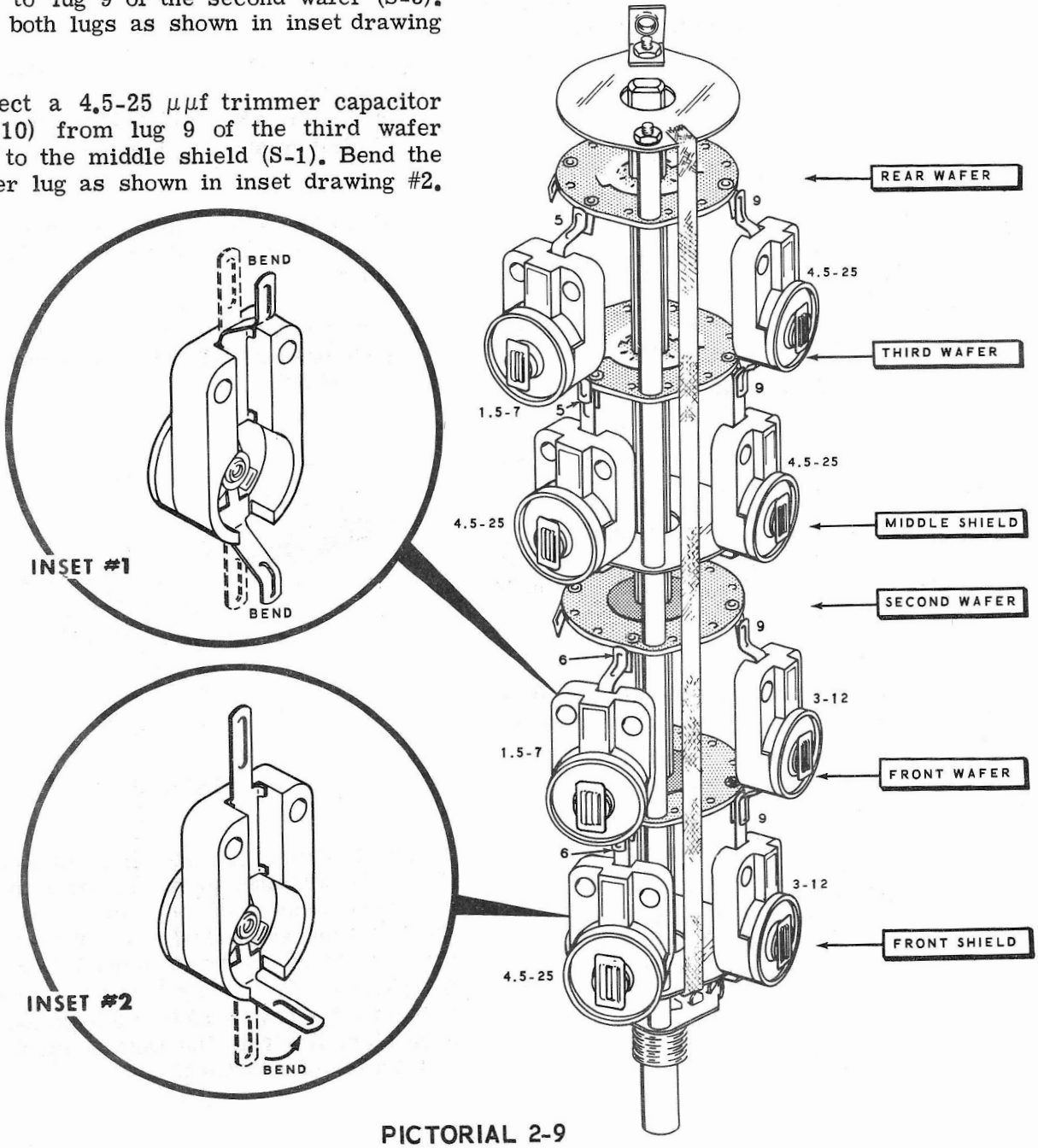

PICTORIAL 2-9

FRONT SUBPANEL ASSEMBLY

Refer to Pictorial 2-10 (fold-out from Page 30) for the following steps.

Position the front subpanel as shown in the Pictorial.

( ) Refer to Detail 2-10A and insert clear lenses through the front of the subpanel at BD, BF, and BT. Push the speednuts over the back of the lenses with the concave side of the speednuts toward the subpanel. Then insert the neon lamps into the lenses.

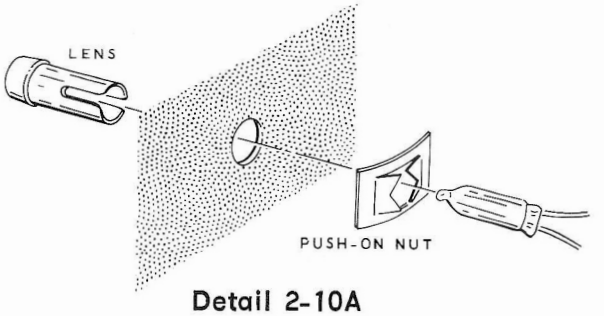

Detail 2-10A

( ) In a like manner, install a red lens and neon lamp at BN with a push-on nut.

( ) Refer to Detail 2-10B, and install a binding post base at BA using binding post base insulators, a #6 solder lug, and two 6-32 nuts. Position the solder lug as shown.

( ) In a like manner, install a binding post base at BH. Use the same arrangement of hardware.

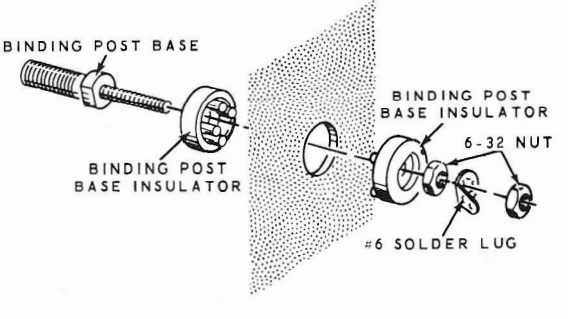

Detail 2-10B

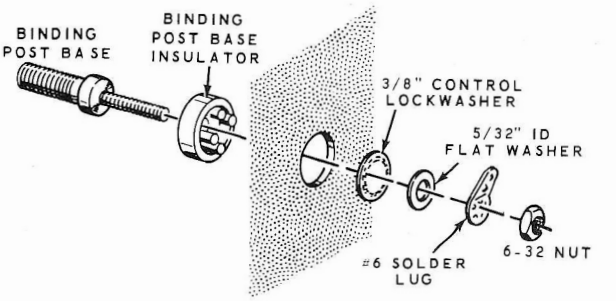

Detail 2-10C

( ) Refer to Detail 2-10C, and install a binding post base at BC. Use a binding post base insulator, a 3/8" control lockwasher, a 5/32" ID flat washer, a #6 solder lug, and a 6-32 nut.

( ) In a like manner, install a binding post base at BJ. Use the same arrangement of hardware.

( ) Refer to Detail 2-10D, and mount a binding post base at BX with a #6 lockwasher and a 6-32 nut.

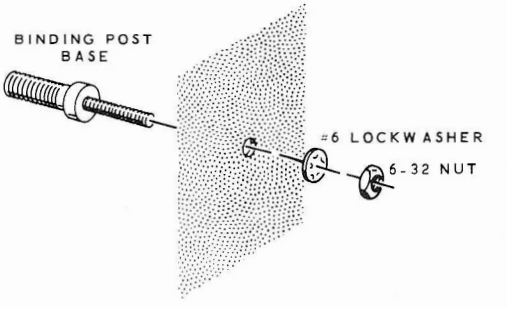

Detail 2-10D

NOTE: Lockwashers and nuts will be used with most screws when mounting parts, unless the assembly steps state otherwise. Consequently, the following steps will call out only the size and type of hardware to be used. For example, the phrase "Use 6-32 x 1/4" hardware" means to use 6-32 x 1/4" screws, #6 lockwashers, and 6-32 nuts. Refer to the Details for the proper installation of hardware.

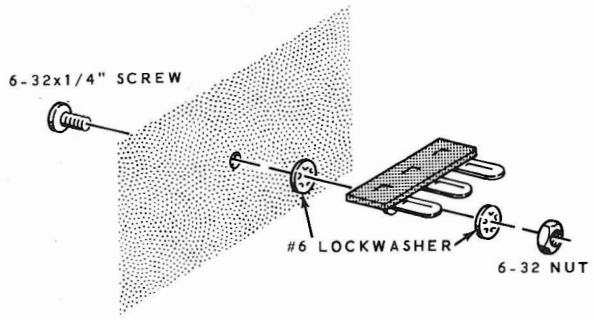

Detail 2-10E

( ) Refer to Detail 2-10E, and mount 3-lug terminal strips at BE and BP. Use 6-32 x 1/4" hardware. Position the terminal strips as shown.

( ) In a like manner, install 2-lug terminal strips at BG and BS with 6-32 x 1/4" hardware. Position the terminal strips as shown.

( ) Refer to Detail 2-10F, and mount SPST rocker switches (#60-24) at AF and AR. Use 6-32 x 5/8" screws and #6 x 3/8" spacers. Position the switches as shown. After the switches are installed, operate the rockers to be sure they are not binding on the front subpanel.

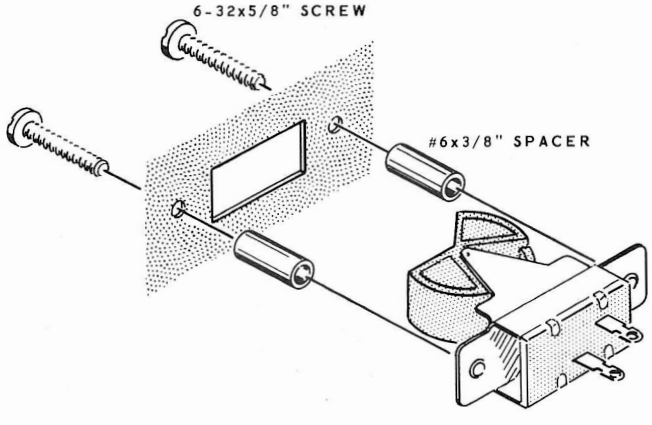

Detail 2-10F

( ) Mount a TPDT rocker switch (#60-28) at AE with 6-32 x 5/8" screws and #6 x 3/8" spacers. Position the switch as shown.

( ) Mount a DPDT rocker switch (#60-25) at AG with 6-32 x 5/8" screws and #6 x 3/8" spacers.

( ) Refer to Detail 2-10G, and mount the coaxial connector at BR with 4-40 x 3/8" hardware. Be sure to mount the connector from the inside of the front subpanel.

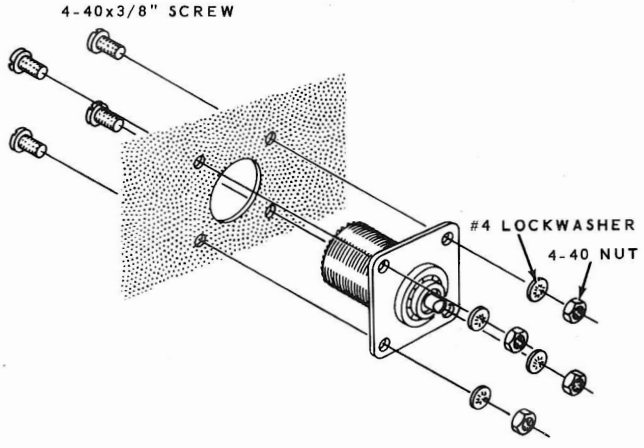

Detail 2-10G

( ) Refer to Detail 2-10H, and mount 100 KΩ tab mount controls (#10-58) at AS and AX. Position the controls as shown and bend the mounting tabs flat against the front subpanel.

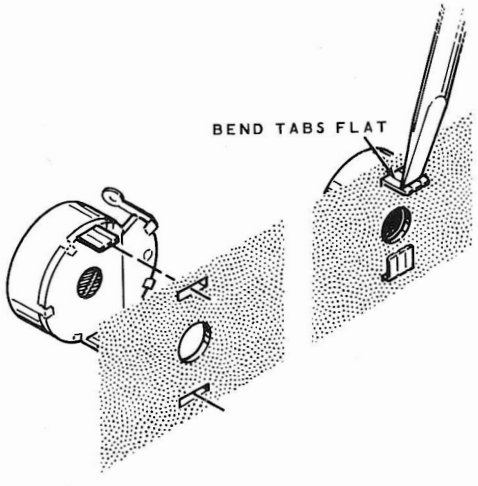

Detail 2-10H

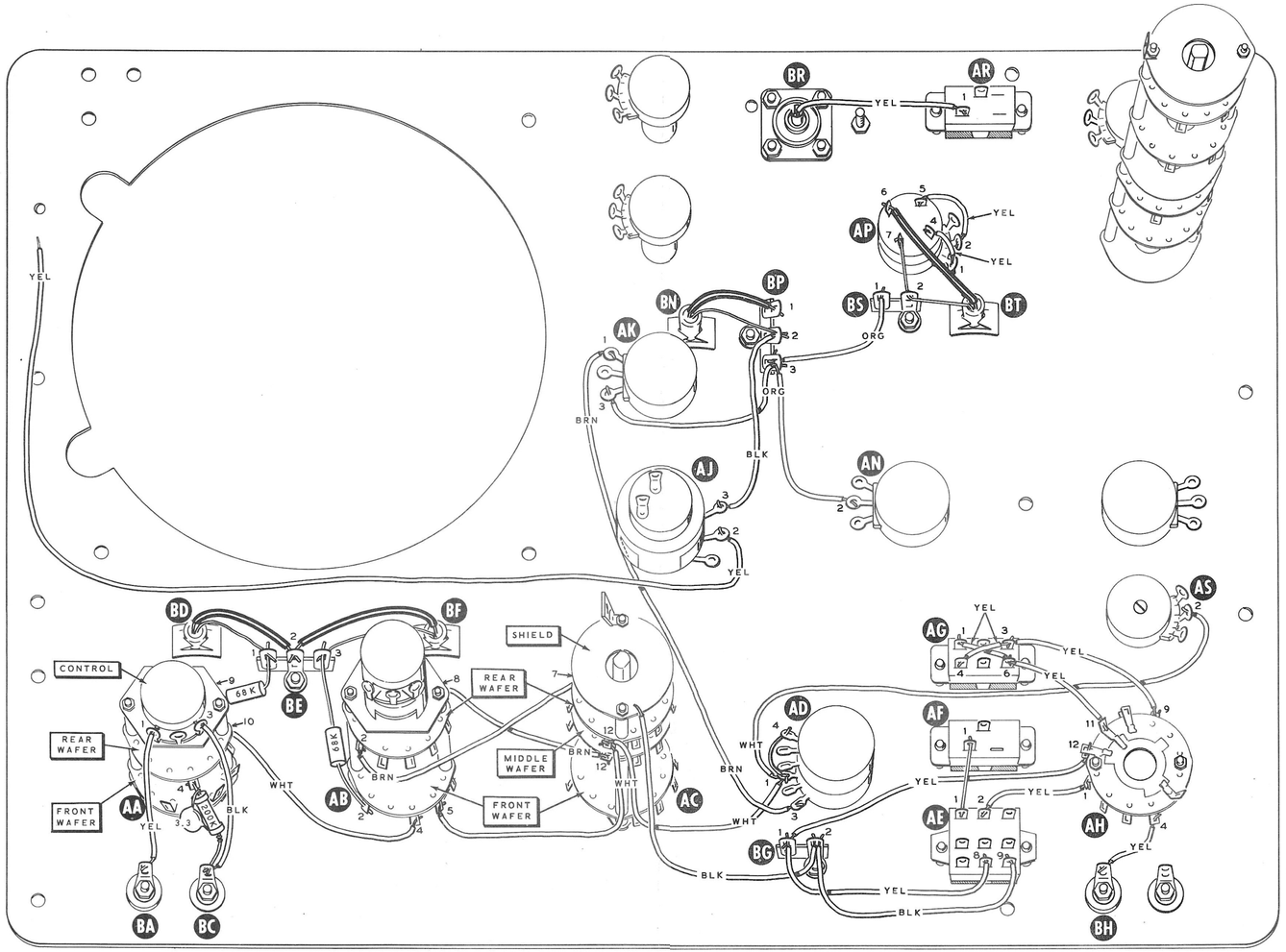

PICTORIAL 2-11

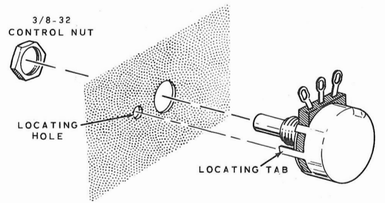

Detail 2-10J

( ) Refer to Detail 2-10J, and mount 100 KΩ controls (#10-55) at AK, AN, and AT with 3/8-32 control nuts. Position the locating tab of each control in the proper locating slot of the front subpanel.

( ) Mount the 100 KΩ/500 KΩ dual control (#12-70) at AD with a 3/8-32 control nut.

( ) Install the 50 Ω control with SPST switch (#19-98) at AJ with a 3/8-32 control nut.

( ) Mount the 500 Ω control with DPST switch (#19-99) at AP with a 3/8-32 control nut.

( ) Mount prewired switch #63-414 at AA with a 3/8-32 control nut.

( ) Mount prewired switch #63-415 at AB with a 3/8-32 control nut.

( ) Install prewired switch #63-413 at AC with a 3/8-32 control nut.

( ) Install the 3-position single-wafer rotary switch (#63-412) at AH with a 3/8-32 control nut.

( ) Mount prewired switch #63-416 at AW with a 3/8-32 control nut.

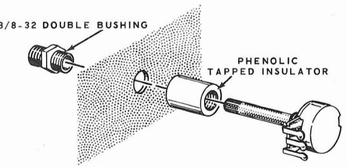

Detail 2-10K

( ) Refer to Detail 2-10K, and mount a 1 megohm control (#10-177) at AL. Use a phenolic tapped insulator and a 3/8-32 double bushing. Carefully tighten the phenolic insulator on the control before mounting the double bushing. Position the control as shown.

( ) In a like manner, install the 500 KΩ control (#10-176) at AM. Use a phenolic tapped insulator and a 3/8-32 double bushing.

FRONT SUBPANEL WIRING

To obtain the best possible performance from your Oscilloscope, it should be wired neatly. Position all wires and components as shown. Whenever possible, the wires should be positioned against the front subpanel.

Refer to Pictorial 2-11 for the following steps.

Connect the free ends of the wires and leads from switch AA as follows:

( ) White wire from lug 10 of the front wafer to lug 4 on the front wafer of switch AB (S-2).

( ) 68 KΩ resistor from lug 9 of the front wafer to lug 1 of terminal strip BE (NS).

( ) Yellow wire from lug 1 of the control to solder lug BA (S-1).

( ) Resistor-capacitor combination (200 KΩ resistor and 3,3 μμf capacitor) from lug 4 of the rear wafer to solder lug BC (NS).

( ) Black wire from lug 3 of the control to solder lug BC (S-2).

The remaining wires and leads of switch AA will be connected later.

Connect the free ends of the wires and leads from switch AB as follows:

( ) 68 KΩ from lug 2 of the front wafer to lug 3 of terminal strip BE (NS).

( ) Brown wire from lug 8 of the rear wafer to lug 12 of the middle wafer on switch AC (S-1).

( ) White wire from lug 5 of the front wafer to lug 12 of the rear wafer on switch AC (S-3).

Connect the free ends of the wires from switch AC as follows:

( ) Brown wire from lug 7 of the middle wafer to lug 2 of the rear wafer on switch AB (S-1).

( ) White wire from lug 12 of the rear wafer to lug 1 on control AD (NS).

( ) Black wire from the shield to lug 2 of terminal strip BG (NS).

The remaining wires from switch AC will be connected later.

( ) Connect one lead of neon lamp BD to lug 1 of terminal strip BE (S-2).

( ) Place a 1-1/4" length of sleeving on the other lead of neon lamp BD. Then connect it to lug 2 of terminal strip BE (NS).

( ) Connect one lead of neon lamp BF to lug 3 of terminal strip BE (S-2).

( ) Place a 1-1/2" length of sleeving on the other lead of neon lamp BF. Then connect it to lug 2 of terminal strip BE (S-2).

( ) Connect one lead of neon lamp BN to lug 2 of terminal strip BP (NS).

( ) Place a 1-1/4" length of sleeving on the other lead of neon lamp BN. Then connect it to lug 1 of terminal strip BP (NS).

( ) Pass one lead of neon lamp BT through lug 2 of terminal strip BS (S-2) to lug 7 of control AP (S-1).

( ) Place a 1-5/8" length of sleeving on the other lead of neon lamp BT. Then connect it to lug 6 of control AP (NS).

( ) Prepare the following lengths of hookup wire:

COLOR	LENGTH
Yellow	5"
Yellow	4-1/4"
Black	4"
Brown	5-3/4"
Yellow	2"
White	6-3/4"
Yellow	1"
Yellow	1"
Yellow	1-1/2"
Yellow	2-1/4"
Yellow	1-1/4"

( ) Connect a 5" yellow wire from lug 1 of terminal strip BG (NS) to <u>both</u> #12 lugs of switch AH (S-2).

( ) Connect a 4-1/4" yellow wire from lug 1 of terminal strip BG (NS) to lug 8 of switch AE (S-1).

( ) Connect a 4" black wire from lug 2 of terminal strip BG (NS) to lug 9 of switch AE (S-1).

( ) Connect a 5-3/4" brown wire from lug 3 of control AD (NS) to lug 1 of control AK (S-1).

( ) Connect a 1" bare wire from lug 1 of switch AE (S-1) to lug 1 of switch AF (S-1). Use a cut-off resistor lead, or remove the insulation from a 1" length of yellow wire.

( ) Connect a 2" yellow wire from lug 2 of switch AE (S-1) to lug 1 of switch AH (NS).

( ) Remove a total of 1" insulation from one end of a 6-3/4" white wire. Pass this end of the wire through lug 1 (S-3) to lug 4 (S-1) of control AD. Connect the other end of the wire to lug 2 of control AS (NS).

( ) Connect a 1" yellow wire between lugs 1 (S-1) and 6 (NS) of switch AG.

( ) Connect a 1" yellow wire between lugs 3 (NS) and 4 (S-1) of switch AG.

( ) Connect a 1-1/2" yellow wire from lug 6 of switch AG (S-2) to lug 11 of switch AH (S-1).

( ) Connect a 2-1/4" yellow wire from lug 3 of switch AG (S-2) to lug 9 of switch AH (S-1).

( ) Connect a 1-1/4" yellow wire from lug 4 of switch AH (S-1) to solder lug BH (S-1).

( ) Prepare the following lengths of hookup wire:

COLOR	LENGTH
Yellow	13"
Orange	2-1/2"
Orange	3-1/2"
Orange	2-1/4"
Black	2-3/4"
Yellow	1-1/4"
Yellow	1-1/4"
Yellow	2-1/4"

( ) Connect one end of a 13" yellow wire to lug 2 of control AJ (S-1). Position the other end as shown, to be connected later.

( ) Connect a 2-1/2" orange wire from lug 3 of terminal strip BP (NS) to lug 2 of control AN (NS).

( ) Connect a 3-1/2" orange wire from lug 3 of control AK (S-1) to lug 3 of terminal strip BP (NS).

( ) Connect a 2-1/4" orange wire from lug 3 of terminal strip BP (NS) to lug 1 of terminal strip BS (NS).

( ) Connect a 2-3/4" black wire from lug 3 of control AJ (S-1) to lug 2 of terminal strip BP (NS).

( ) Connect a 1-1/4" yellow wire between lugs 5 (S-1) and 2 (NS) of control AP.

( ) Connect a 1-1/4" yellow wire between lugs 4 (S-1) and 1 (NS) of control AP.

( ) Connect a 2-1/4" yellow wire from coaxial connector BR (NS) to lug 1 of switch AR (S-1).

Refer to Pictorial 2-12 (fold-out from Page 43) for the following steps.

( ) Connect a 1 megohm (brown-black-green) resistor from lug 2 of control AD (S-1) to lug 1 of terminal strip BG (NS).

( ) Pass one lead of a 1 megohm (brown-black-green) resistor through lug 2 of terminal strip BG (NS) to lug 6 of control AD (S-1). Place a 1-1/4" length of sleeving on the other lead and connect it to lug 2 of switch AF (NS).

( ) Connect a .02 μfd disc capacitor between lugs 1 (S-4) and 2 (S-5) of terminal strip BG.

( ) Connect a .02 μfd disc capacitor from lug 2 of switch AF (NS) to lug 1 of switch AH (S-2).

( ) Prepare a resistor-capacitor combination, using a 470 KΩ (yellow-violet-yellow) resistor and a .001 μfd disc capacitor.

( ) Connect this resistor-capacitor combination from lug 2 of switch AF (S-3) to both #10 lugs of switch AH (S-2).

( ) Connect a 100 KΩ (brown-black-yellow) resistor from lug 5 of switch AH (S-1) to solder lug BJ (S-1).

( ) Connect a 270 KΩ (red-violet-yellow) resistor between lugs 1 (S-2) and 3 (S-4) of terminal strip BP.

( ) Connect a 5.6 megohm (green-blue-green) 1 watt resistor from lug 3 of control AL (S-1) to lug 2 of terminal strip BP (S-3).

( ) Connect a 2.2 megohm (red-red-green) 1 watt resistor from lug 1 of control AL (S-1) to lug 3 of control AM (S-1).

( ) Connect a 330 KΩ (orange-orange-yellow) resistor from lug 6 of control AP (S-2) to lug 1 of terminal strip BS (S-2).

( ) Connect a .1 μfd tubular capacitor from coaxial connector BR (S-2) to lug 2 of switch AR (NS). Note the position of the banded end. Position the capacitor as shown in the inset drawing in the Pictorial.

( ) Cut one lead of a 100 Ω (brown-black-brown) resistor to 1". Connect this lead to lug 2 of switch AG (S-1). The other lead will be connected later.

( ) Cut one lead of a 100 Ω (brown-black-brown) resistor to 1". Connect this lead to lug 5 of switch AG (S-1). The other lead will be connected later.

NOTE: Only one end of each of the following wires and components will be connected in the following steps. Their free ends will be connected later. Do not shorten the leads of any of the components.

( ) Place a 5/8" length of sleeving on one lead of a 6800 Ω (blue-gray-red) resistor. Pass this lead through lug 1 of control AT (S-2) to lug 3 of control AS (S-1).

( ) Place a 1-1/4" length of sleeving on one lead of a 150 KΩ (brown-green-yellow) resistor. Connect this lead to lug 3 of control AT (S-1).

( ) Prepare the following lengths of hookup wire:

COLOR	LENGTH
Yellow	14"
Yellow	3-3/4"
Yellow	3-1/2"
Green	3"
Yellow	12"
Yellow	12"
Yellow	9"
Yellow	9-1/2"
Yellow	9"
Yellow	8-1/2"
Yellow	8"

( ) Connect one end of a 14" yellow wire to lug 5 of control AD (S-1). Position the other end of the wire as shown.

( ) Connect one end of a 3-3/4" yellow wire to lug 4 of switch AE (S-1).

( ) Connect one end of a 3-1/2" yellow wire to lug 5 of switch AE (S-1).

( ) Connect one end of a 3" green wire to lug 3 of switch AH (S-1).

( ) Connect one end of a 12" yellow wire to lug 1 of control AN (S-1).

( ) Connect one end of a 12" yellow wire to lug 3 of control AN (S-1).

( ) Connect one end of a 9" yellow wire to lug 2 of control AP (S-2).

( ) Connect one end of a 9-1/2" yellow wire to lug 1 of control AP (S-2).

( ) Connect one end of a 9" yellow wire to lug 3 of control AX (S-1).

( ) Connect one end of an 8-1/2" yellow wire to lug 2 of control AX (S-1).

( ) Connect one end of an 8" yellow wire to lug 1 of control AX (S-1).

Set the front subpanel aside until it is called for later.

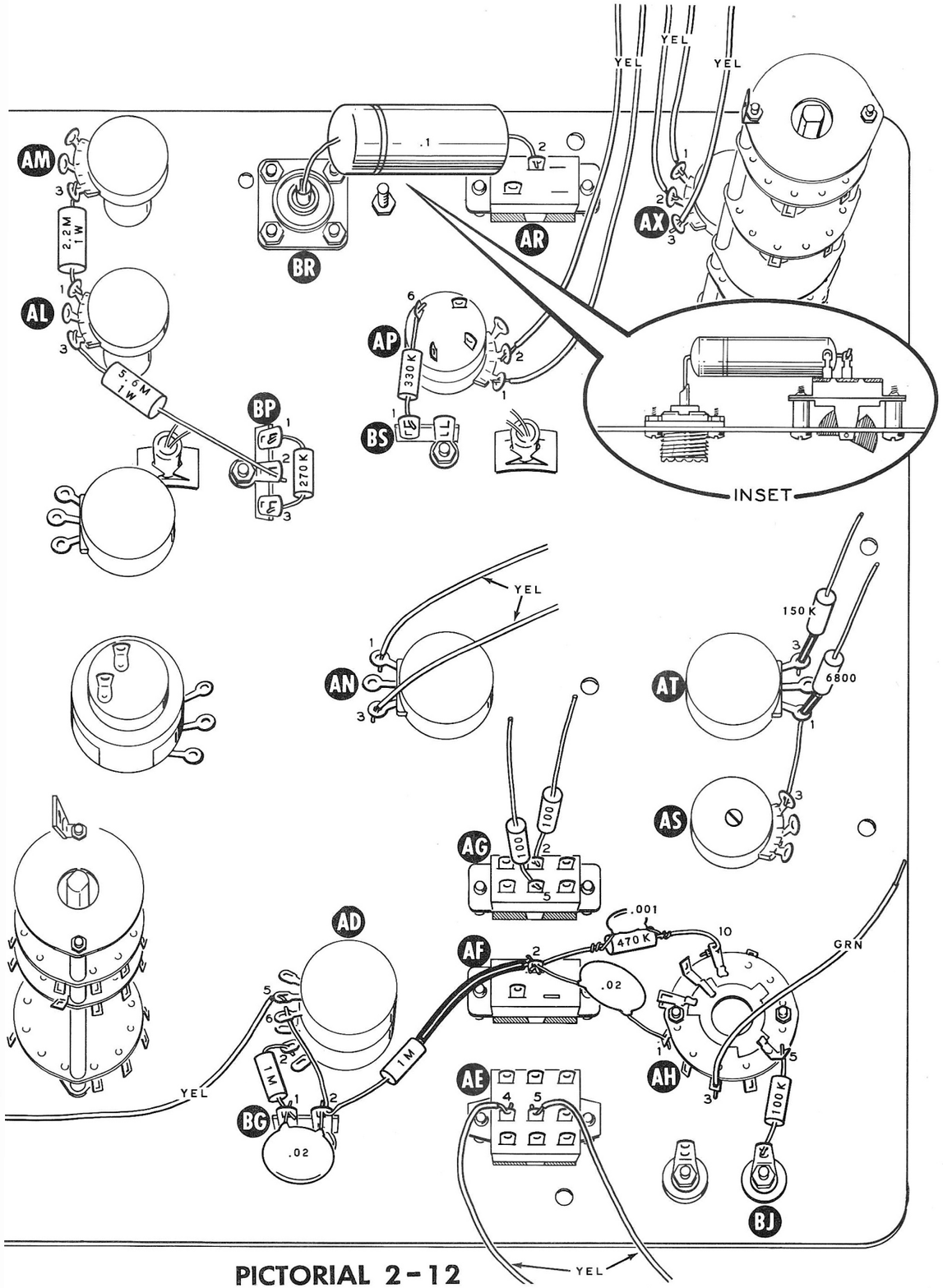

PICTORIAL 2-12

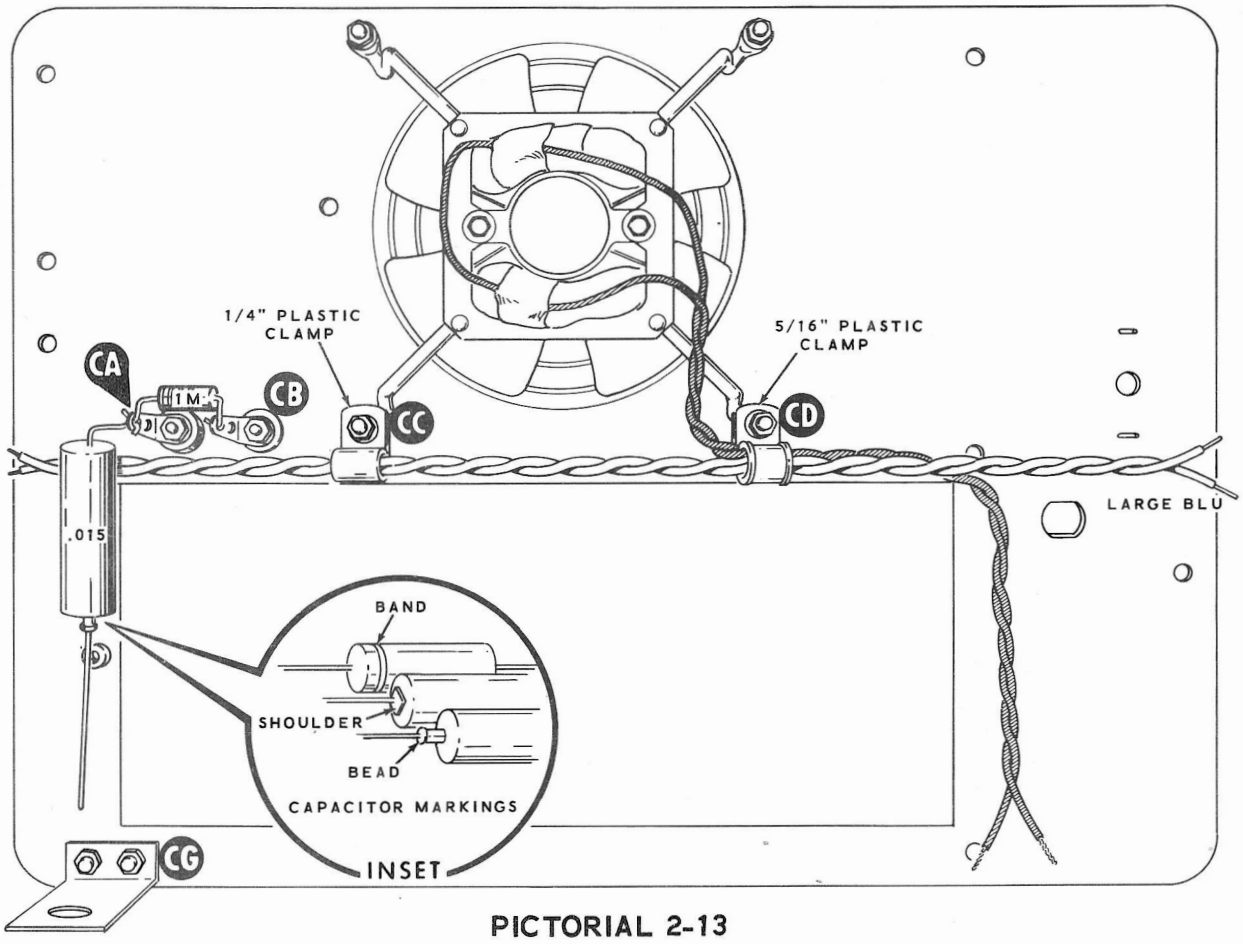

PICTORIAL 2-13

REAR PANEL ASSEMBLY

Refer to Pictorial 2-13 for the following steps.

Locate the rear panel and position it as shown.

( ) Refer to Detail 2-13A, and mount a binding post base at CA. Use binding post base insulators, a #6 solder lug, and two 6-32 nuts. Position the solder lug as shown.

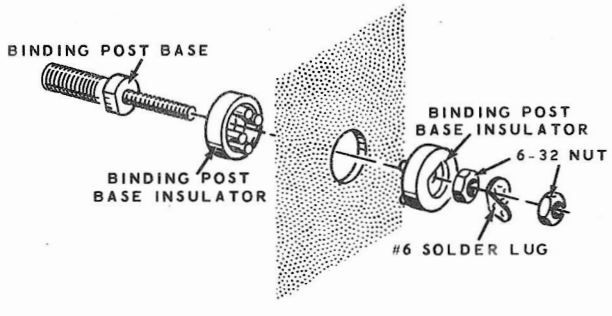

Detail 2-13A

( ) Refer to Detail 2-13B, and mount a binding post base at CB. Use a binding post insulator, a 3/8-32 control lockwasher, a 5/32" ID flat washer, a #6 solder lug, and a 6-32 nut. Position the solder lug as shown.

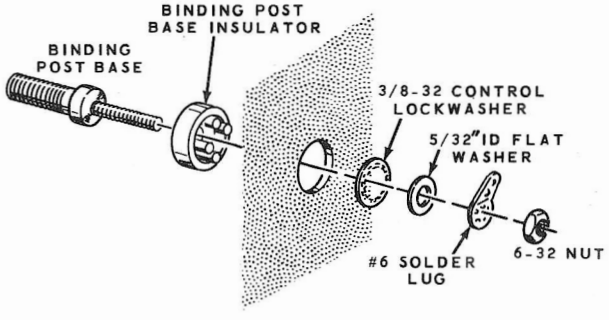

Detail 2-13B

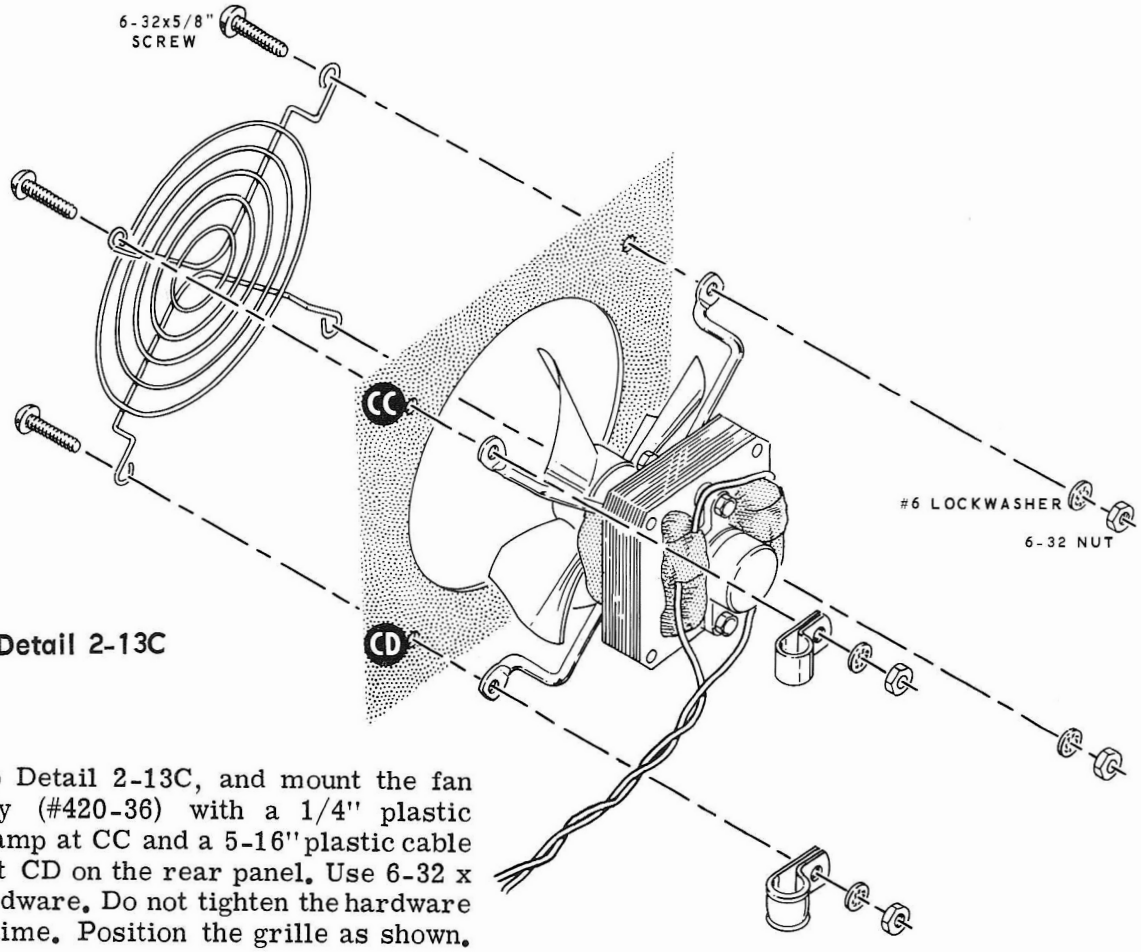

Detail 2-13C

( ) Refer to Detail 2-13C, and mount the fan assembly (#420-36) with a 1/4" plastic cable clamp at CC and a 5-16" plastic cable clamp at CD on the rear panel. Use 6-32 x 5/8" hardware. Do not tighten the hardware at this time. Position the grille as shown.

( ) Cut two 21-1/2" lengths of the large blue hookup wire, and remove 1/4" of insulation from both ends of each wire. Twist these wires together to form a twisted pair with approximately one twist per inch.

( ) Pass this twisted pair of wires through the cable clamps so one end is even with the top of the rear panel.

( ) Twist the fan leads together and pass them through the plastic clamp at CD. Be sure these leads are clear of the fan blade. Now, tighten the fan assembly hardware.

( ) Refer to Detail 2-13D, and mount the long L bracket at CG with 8-32 x 3/8" hardware.

REAR PANEL WIRING

Refer to Pictorial 2-13 for the following steps.

( ) Connect a 1 megohm (brown-black-green) resistor from solder lug CA (NS) to solder lug CB (S-1).

( ) Cut the lead opposite the marked end of a .015 μfd tubular capacitor to 3/4". Connect this lead to solder lug CA (S-2). Position the capacitor as shown. See the inset drawing on the Pictorial.

This completes the preliminary wiring of the rear panel. Set the panel aside until it is called for later.

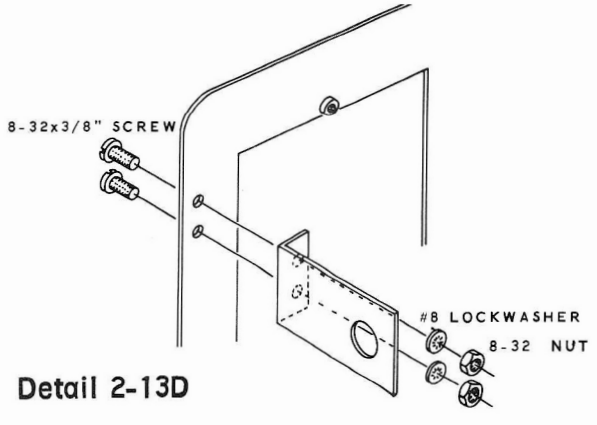

Detail 2-13D

TOP AND BOTTOM CHASSIS

This section of the Manual contains the Parts List and Step-By-Step Assembly Instructions for the assembly and wiring of the top and bottom chassis.

PARTS LIST #7

Unpack package #7 and check each part against the following Parts List. The numbers in parentheses are keyed to the numbers in the Parts Pictorial (fold-out from Page 49).

PART No.	PARTS Per Kit	DESCRIPTION
RESISTORS		
1/2 Watt		
(1) 1-16	2	4700 Ω (yellow-violet-red)
1-35	2	1 megohm (brown-black-green)
1 Watt		
(2) 1-11-1	3	10 Ω (brown-black-black)
Wire-wound		
(3) 3-11-25	1	1500 Ω (1.5 KΩ) 25 watt
3-14-7	2	2000 Ω 7 watt
3-21-7	1	4700 Ω 7 watt
3-7-10	1	10 KΩ 10 watt

PART No.	PARTS Per Kit	DESCRIPTION
CAPACITORS		
(4) 21-31	2	.02 μfd disc
(5) 25-51	3	200 μfd 300 V electrolytic
INSULATORS-CLAMPS-TERMINAL STRIPS		
(6) 73-4	1	5/16" rubber grommet
73-3	1	1/2" rubber grommet
73-2	2	3/4" rubber grommet
(7) 75-17	4	Binding post base insulator
(8) 207-2	1	CRT clamp
(9) 207-8	4	1/2" metal clamp
(10) 431-73	2	Single-hole insulator
431-74	1	2-hole insulator
(11) 431-2	2	2-lug terminal strip
(12) 431-65	1	4-pin terminal strip
(13) 431-72	1	18-lug terminal board
(14) 481-1	1	Metal capacitor mounting wafer
481-3	2	Insulated capacitor mounting wafer

PART No.	PARTS Per Kit	DESCRIPTION
GENERAL		
(15) 11-65	2	500 Ω tab mount control
(16) 40-733	2	Output peaking coil
40-734	2	Delay line coil
(17) 57-27	12	Silicon diode (750 ma 500 V)
(18) 100-16-18	2	Red binding post cap
HARDWARE		
#4 Hardware		
(19) 250-273	35	4-40 x 3/8" screw
(20) 252-89	35	4-40 push-on nut
#6 Hardware		
(21) 250-56	5	6-32 x 1/4" screw
(22) 250-89	11	6-32 x 3/8" screw
(23) 250-26	2	6-32 x 5/8" screw
(24) 250-79	1	6-32 x 1-1/4" screw
(25) 252-3	21	6-32 nut
(26) 253-45	1	5/32" ID flat washer
(27) 254-1	21	#6 lockwasher

PART No.	PARTS Per Kit	DESCRIPTION
#6 Hardware (cont'd.)		
(28) 255-1	2	#6 x 1/8" spacer
(29) 453-32	1	#6 x 1-1/4" tapped spacer
(30) 259-1	3	#6 solder lug
(31) 259-12	2	Binding post solder lug
(32) 427-2	2	6-32 binding post base
#8 Hardware		
(33) 250-137	3	8-32 x 3/8" screw
(34) 252-4	3	8-32 nut
(35) 254-2	3	#8 lockwasher
ITEMS FROM PACK #8		
(36) 41-2	1	Pair of delay lines
344-6	1	Large red wire
(37) 200-458	1	Top chassis
(38) 200-457	1	Bottom chassis
(39) 204-695	1	CRT support chassis
(40) 204-697	1	Chassis support bracket

STEP-BY-STEP ASSEMBLY

CHASSIS SUPPORT BRACKET ASSEMBLY AND WIRING

Refer to Pictorial 3-1 for the following steps.

( ) Refer to Detail 3-1A, and mount #6 x 1/8" spacers on the 18-lug terminal board. Use 6-32 x 5/8" screws and 6-32 nuts. Then mount the terminal board on the chassis support bracket with #6 lockwashers and 6-32 nuts.

NOTE: The leads of the components connected to the 18-lug terminal board should be pushed down to the bottom of the slots in the terminal board lugs; but they should not be wrapped around the lugs. Since other connections must be made later, be sure you do not fill the slots of the lugs with solder.

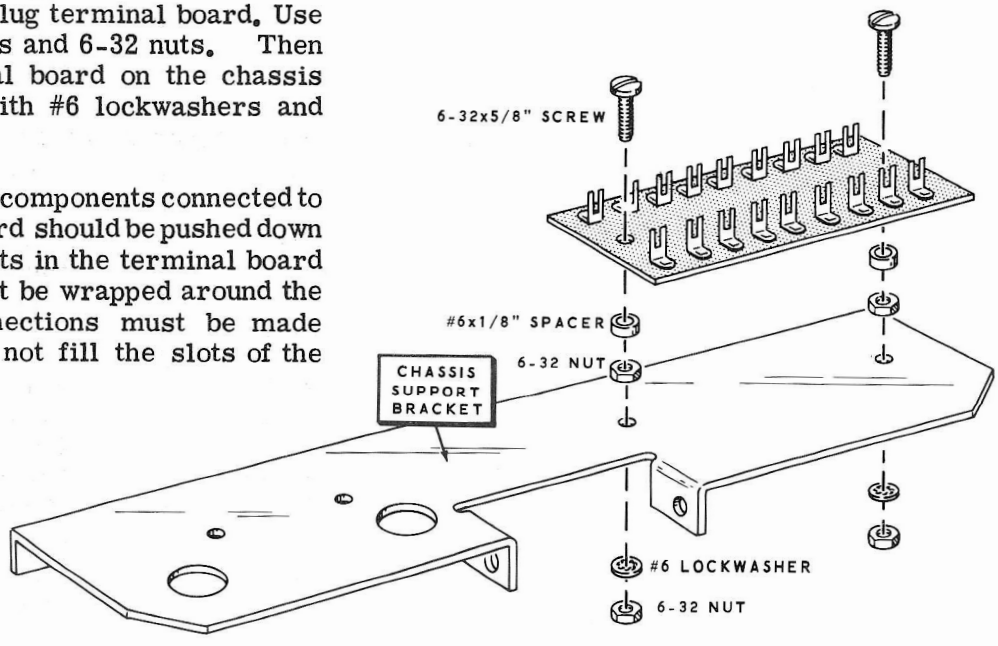

Detail 3-1A

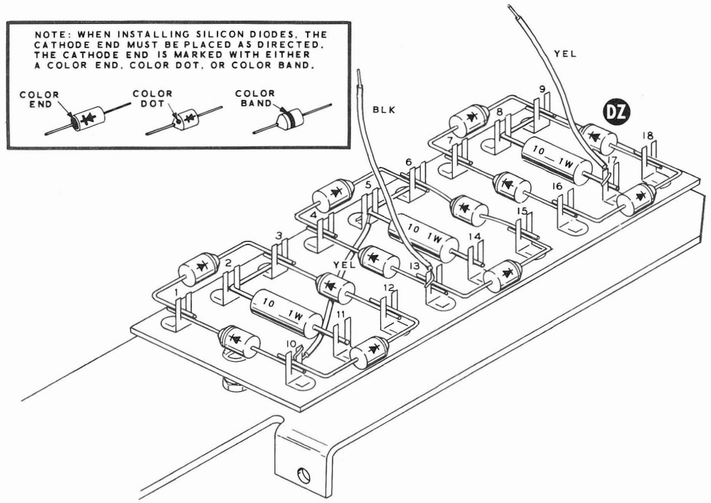

PICTORIAL 3-1

( ) Prepare the following lengths of hookup wire:

COLOR	LENGTH
Yellow	2-1/4"
Black	2"
Yellow	2"

Install the following wires and components on 18-lug terminal board DZ:

( ) 2-1/4" yellow wire between lugs 5 (NS) and 10 (NS).

( ) One lead of a 10 Ω (brown-black-black) 1 watt resistor through lug 2 (S-2) to lug 3 (NS), and the other lead to lug 11 (S-1).

( ) One lead of a 10 Ω (brown-black-black) 1 watt resistor through lug 5 (S-3) to lug 6 (NS), and the other lead to lug 14 (S-1).

( ) One lead of a 10 Ω (brown-black-black) 1 watt resistor through lug 8 (S-2) to lug 9 (NS), and the other lead to lug 17 (NS).

NOTE: When installing silicon diodes, be sure to position the cathode (marked end) as shown. See the inset drawing on the Pictorial.

( ) Silicon diode between lugs 1 (NS) and 10 (NS).

( ) Silicon diode between lugs 1 (S-2) and 3 (NS).

( ) Silicon diode between lugs 10 (S-3) and 12 (NS).

( ) Silicon diode between lugs 3 (S-3) and 12 (S-2).

( ) Silicon diode between lugs 4 (NS) and 13 (NS).

PARTS PICTORIAL

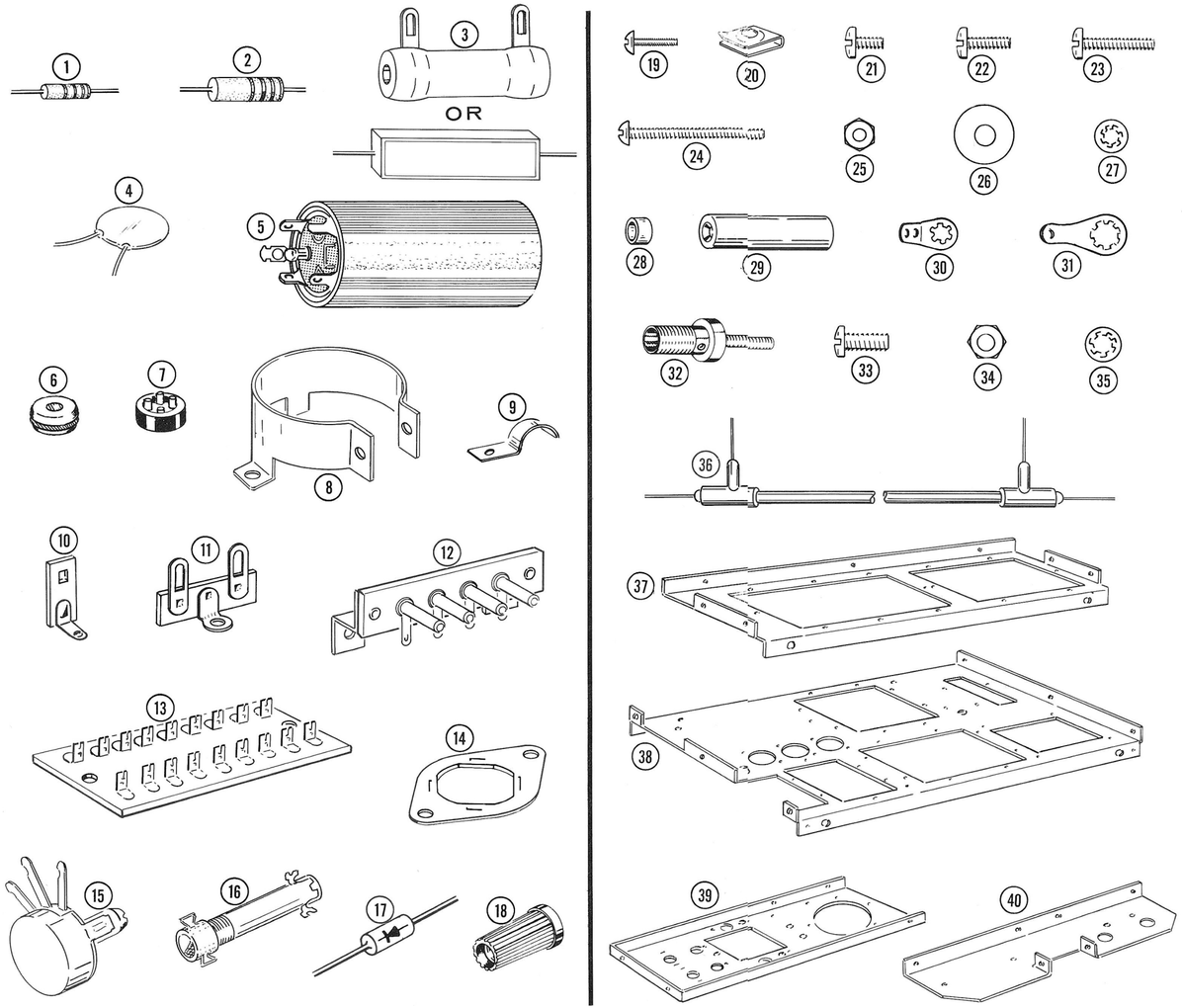

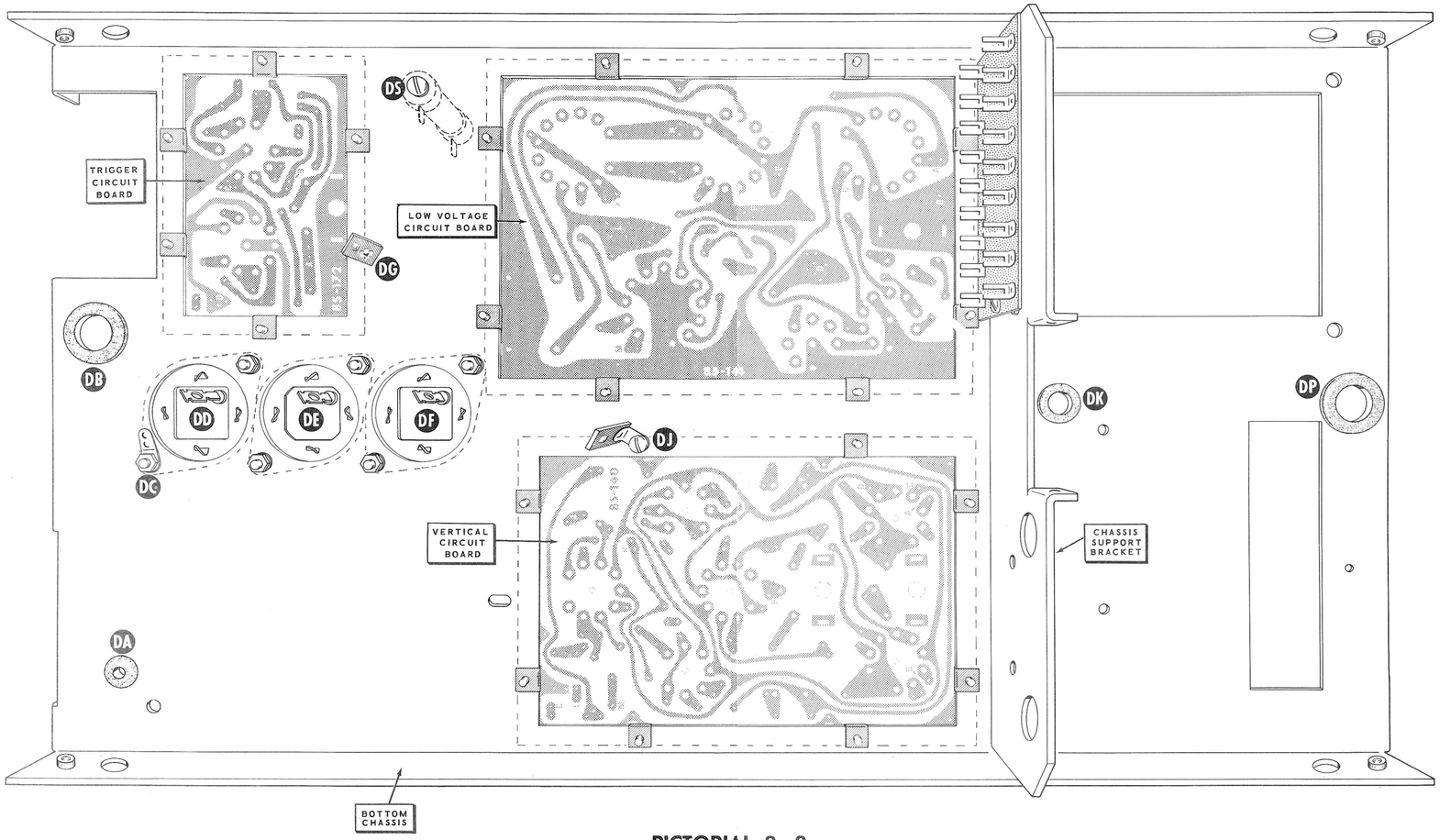

PICTORIAL 3-2

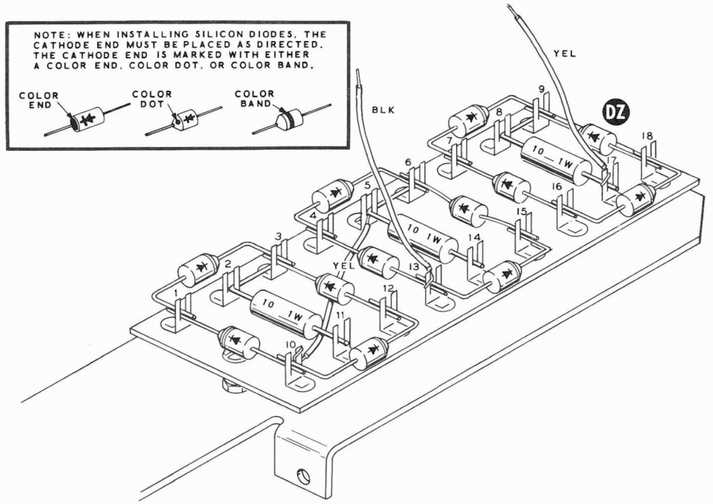

PICTORIAL 3-1 (Repeat)

( ) Silicon diode between lugs 4 (S-2) and 6 (NS).

( ) Silicon diode between lugs 13 (NS) and 15 (NS).

( ) Silicon diode between lugs 6 (S-3) and 15 (S-2).

( ) Silicon diode between lugs 7 (NS) and 16 (NS).

( ) Silicon diode between lugs 7 (S-2) and 9 (NS).

( ) Silicon diode between lugs 16 (S-2) and 18 (NS).

( ) Silicon diode between lugs 9 (S-3) and 18 (S-2).

( ) Connect one end of a 2" black wire to lug 13 (S-3).

( ) Connect one end of a 2" yellow wire to lug 17 (S-2).

This completes the wiring of the terminal board. Check to see that all connections are soldered, especially those leads at the bottom of the lugs. Set the chassis support bracket aside until it is called for later.

BOTTOM CHASSIS ASSEMBLY

Refer to Pictorial 3-2 for the following steps.

( ) Install a 5/16" rubber grommet at DA.

( ) Install 3/4" rubber grommets at DB and DP.

( ) Install a 1/2" rubber grommet at DK.

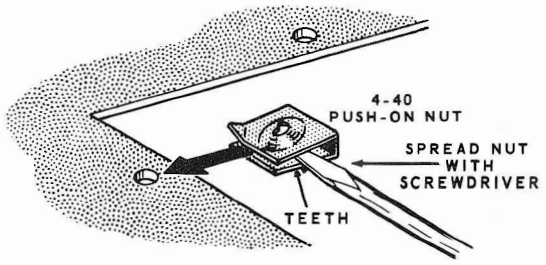

Detail 3-2A

( ) Refer to Detail 3-2A, and install 4-40 push-on nuts at all circuit board mounting holes around the three chassis cutouts except holes DG and DJ. Be sure to position the teeth of the nuts so they will cut into the foil side of the circuit boards.

( ) Install a 4-40 push-on nut at the proper hole on the trigger circuit board (#85-172-1). Position the teeth of the nut on the foil side of the circuit board.

( ) Refer to Detail 3-2B, and mount the trigger circuit board (#85-172-1) with a single hole insulator at DG. Use 4-40 x 3/8" screws. Position the circuit board and insulator as shown.

( ) Install a 4-40 push-on nut at the proper hole on the vertical circuit board (#85-140-1). Position the teeth of the nut on the foil side of the circuit board.

( ) Mount the vertical circuit board (#85-140-1) with a single hole insulator at DJ. Use 4-40 x 3/8" screws. Position the circuit board and insulator as shown.

( ) Mount the low voltage circuit board (#85-144-1) with 4-40 x 3/8" screws. Position the circuit board as shown.

( ) Refer to Detail 3-2C, and mount the chassis support bracket. Use 8-32 x 3/8" hardware in the two indicated holes. Make sure the other two mounting holes in the bracket line up with the corresponding holes in the chassis. Also, check to see that the diode connected between lugs 7 and 9 of 18-lug terminal board DZ, is not touching the mounting screw of the low voltage circuit board.

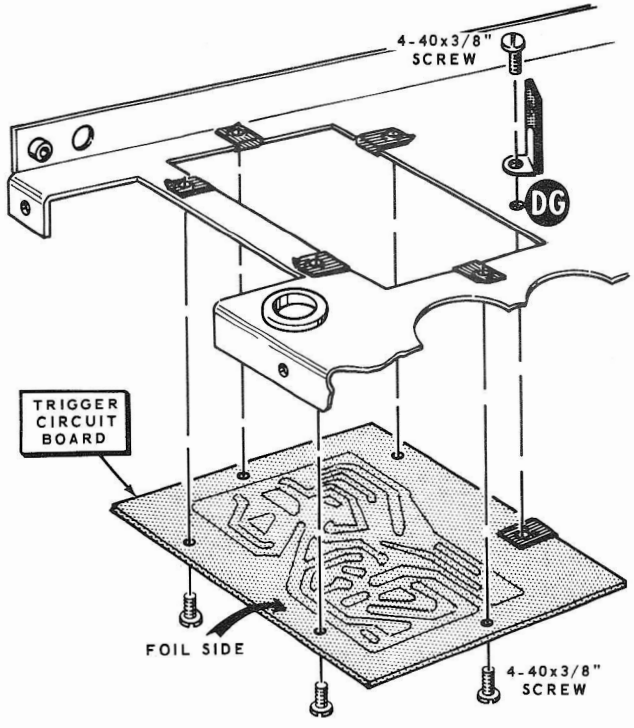

Detail 3-2B

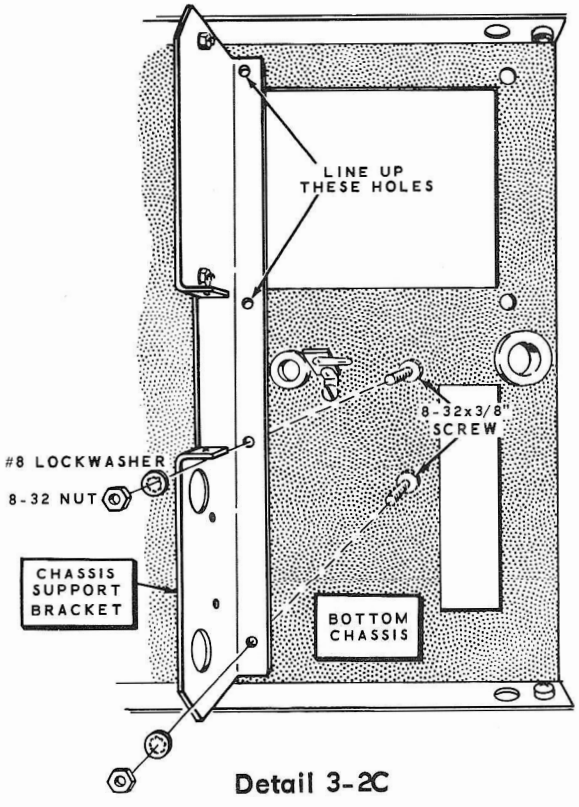

Detail 3-2C

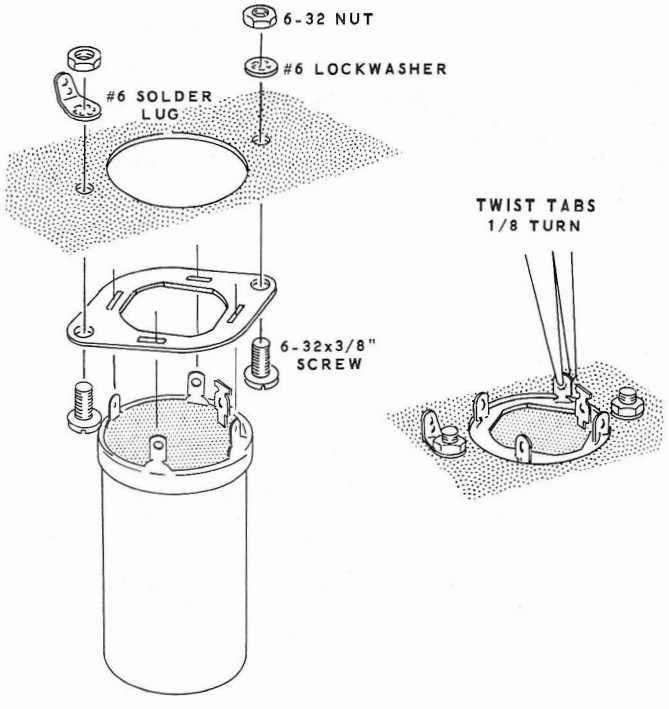

Detail 3-2D

Refer to Detail 3-2D for the following steps.

NOTE: In the following three steps, be sure to install the capacitor mounting wafers on the side of the chassis shown in the Pictorial.

( ) Mount an insulated capacitor mounting wafer at DD with a #6 solder lug at DC. Use 6-32 x 3/8" hardware.

( ) In a like manner, mount a metal capacitor mounting wafer at DE. Use 6-32 x 3/8" hardware.

( ) Mount an insulated capacitor mounting wafer at DF. Use 6-32 x 3/8" hardware.

( ) Mount 200 μfd 300 volt electrolytic capacitors at DD, DE, and DF. Position the lug of each capacitor as shown in Pictorial 3-2. Twist the mounting tabs 1/8 turn.

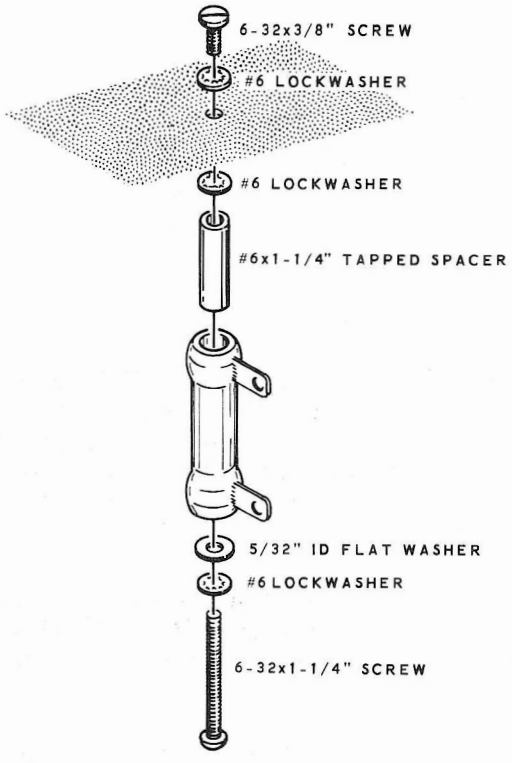

Detail 3-2E

Refer to Detail 3-2E for the following steps.

( ) Mount a #6 x 1-1/4" tapped spacer at DS, with a 6-32 x 3/8" screw and two #6 lockwashers.

( ) Mount a 1500 Ω (1.5 KΩ) 25 watt resistor over the spacer at DS with a 6-32 x 1-1/4" screw, a 5/32" ID flat washer, and a #6 lockwasher. Position the resistor as shown, and do not overtighten the hardware.

Set the chassis aside temporarily.

CRT SUPPORT CHASSIS ASSEMBLY AND WIRING

Refer to Pictorial 3-3 for the following steps.

( ) Refer to Detail 3-3A, and mount the CRT clamp at EA. Use 8-32 x 3/8" hardware only at the hole indicated. Position the clamp as shown and do not tighten the hardware. Spread the clamp open so its other mounting holes line up with the mounting holes of the CRT support chassis.

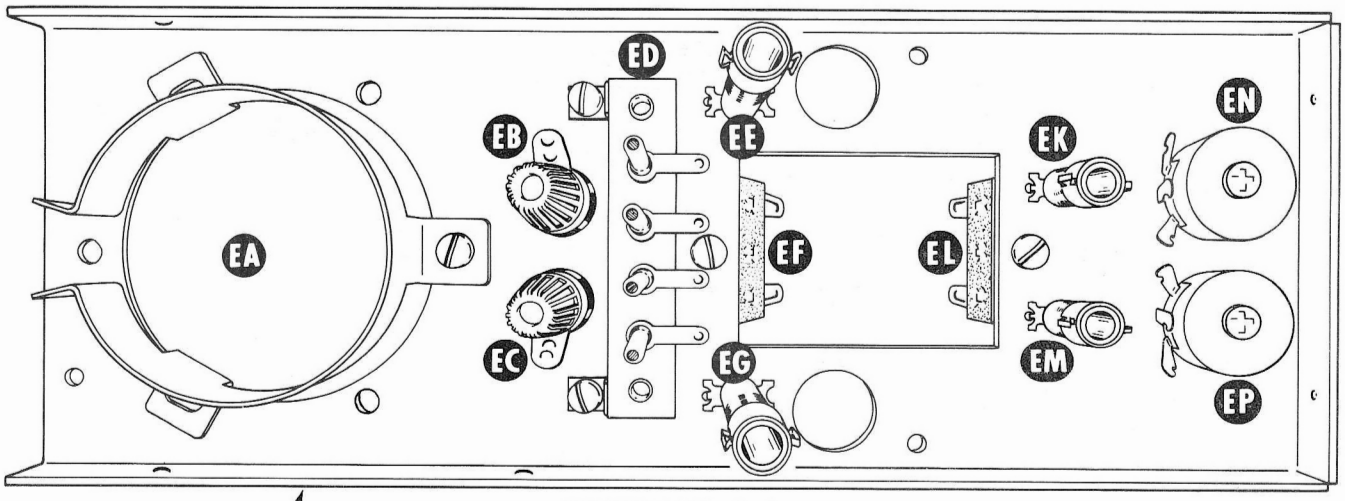

PICTORIAL 3-3

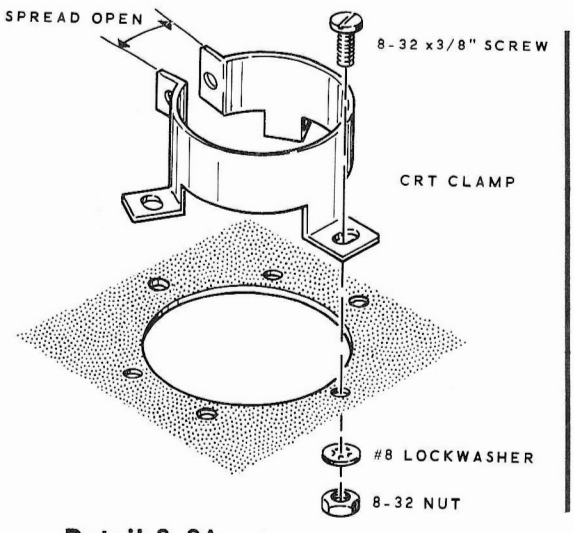

Detail 3-3A

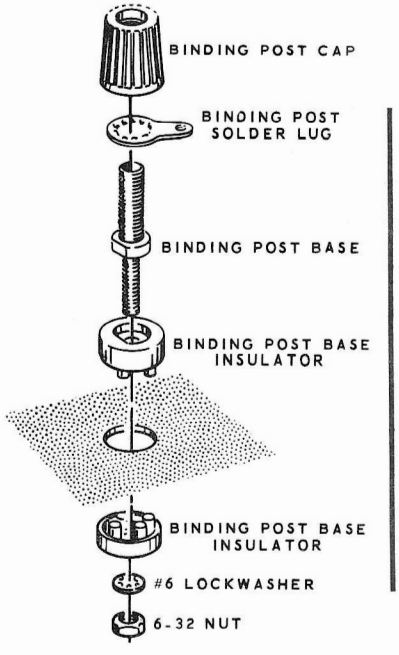

Detail 3-3B

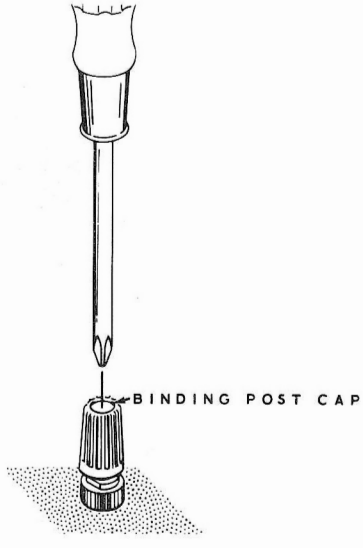

Detail 3-3C

( ) Refer to Detail 3-3B, and mount binding post bases at EB and EC. Use binding post solder lugs, binding post base insulators, #6 lockwashers, and 6-32 nuts. Now, screw red binding post caps on the binding post bases.

( ) Slightly spread the open end of each binding post by inserting a phillips screwdriver into it; then tap the screwdriver lightly. This will keep the binding post caps from falling off. See Detail 3-3C.

( ) Refer to Detail 3-3D, and mount 2-lug terminal strips at EF and EL on the reverse side of the CRT support chassis. Use 6-32 x 1/4" hardware. Position the terminal strips as shown.

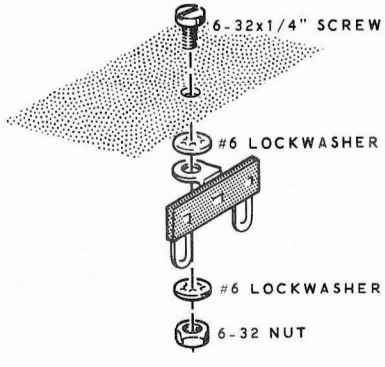

Detail 3-3D

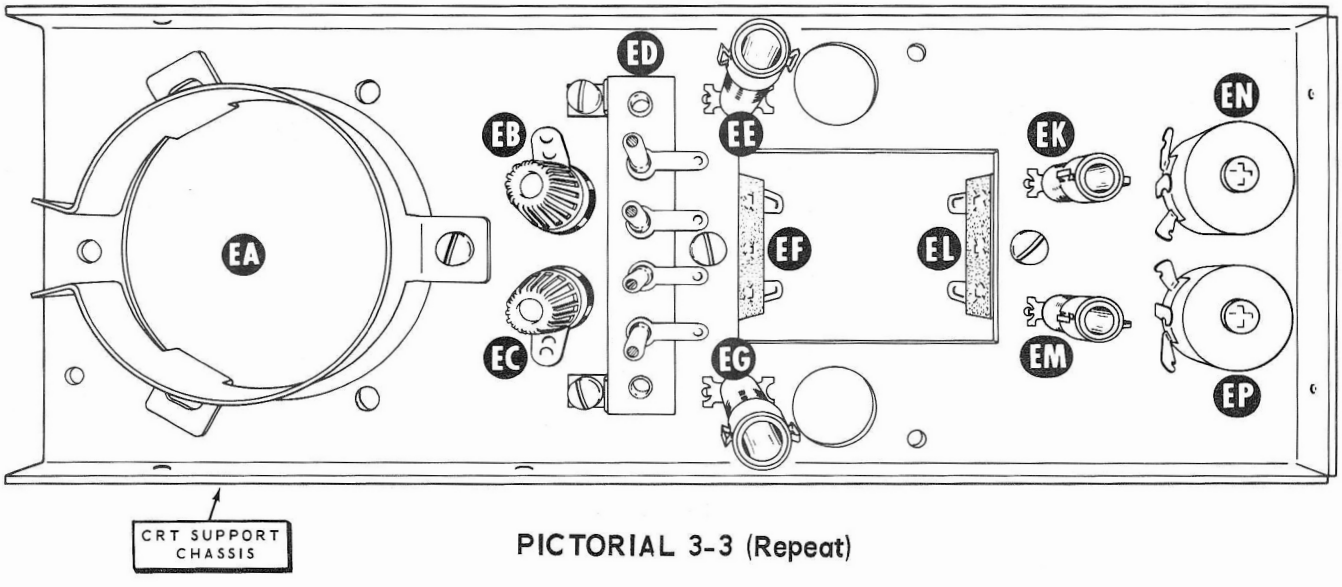

PICTORIAL 3-3 (Repeat)

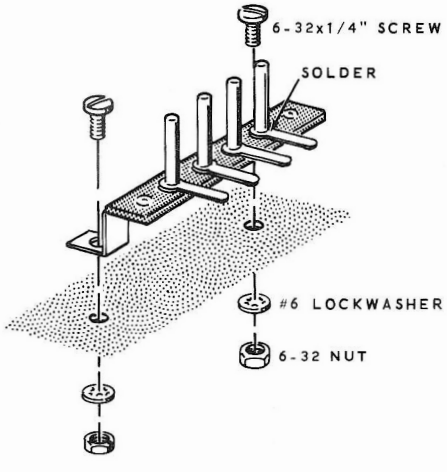

Detail 3-3E

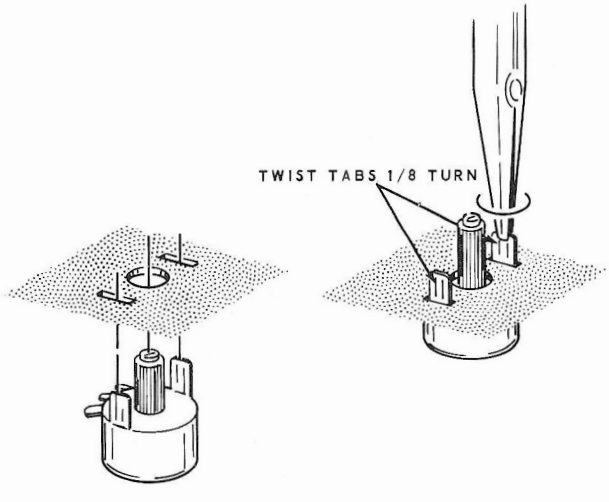

Detail 3-3F

( ) Refer to Detail 3-3E, and mount the 4-pin terminal strip at ED with 6-32 x1/4" hardware. Solder each pin to its lug as shown.

( ) Refer to Detail 3-3F, and mount 500 Ω tab mount controls (#11-65) at EP and EN. Position the controls as shown and twist the tabs 1/8 turn.

( ) Refer to Detail 3-3G, and mount delay line coils (#40-734) at EE and EG. Align the locating tab on each coil with the locating hole in the CRT support chassis; then push the coils in until the locking tabs snap into place.

( ) In a like manner, mount output peaking coils (#40-733) at EK and EM.

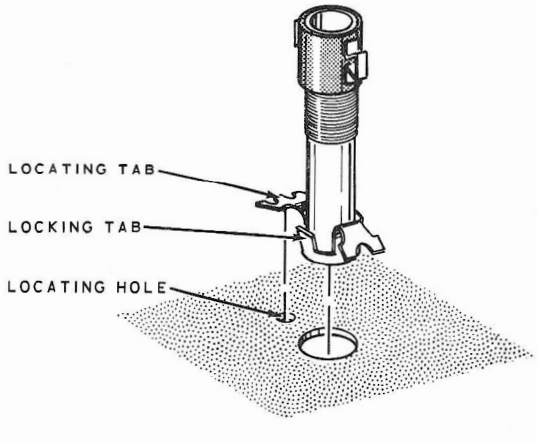

Detail 3-3G

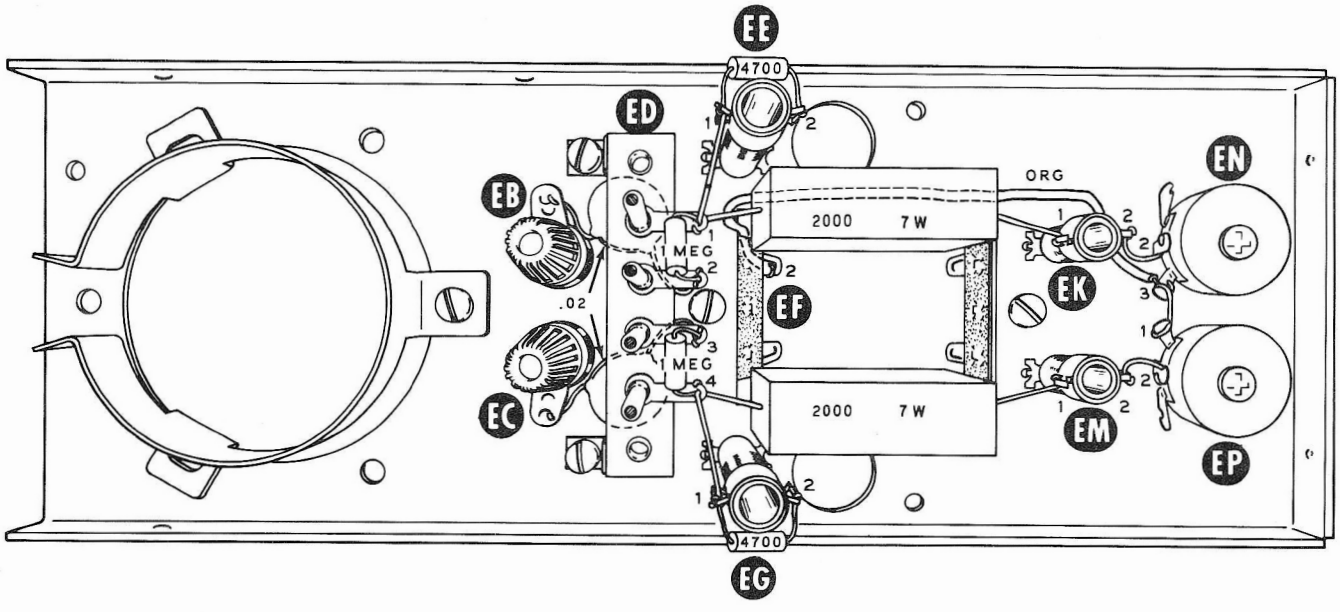

PICTORIAL 3-4

Refer to Pictorial 3-4 for the following steps.

( ) Connect a .02 μfd disc capacitor from solder lug EB (S-1) to lug 2 of terminal strip ED (NS). Position the capacitor under terminal strip ED.

( ) Connect a .02 μfd disc capacitor from solder lug EC (S-1) to lug 3 of terminal strip ED (NS). Position the capacitor under terminal strip ED.

( ) Connect a 1 megohm (brown-black-green) resistor between lugs 1 (NS) and 2 (S-2) of terminal strip ED.

( ) Connect a 1 megohm (brown-black-green) resistor between lugs 3 (S-2) and 4 (NS) of terminal strip ED.

( ) Pass one lead of a 2000 Ω 7 watt resistor through lug 1 of terminal strip ED (S-3) to lug 1 of coil EE (NS). Connect the other lead to lug 1 of coil EK (S-1). Position the resistor approximately 1/4" away from the CRT support chassis.

( ) Connect a 4700 Ω (yellow-violet-red) resistor between lugs 1 (S-2) and 2 (NS) of coil EE.

( ) Pass one lead of a 2000 Ω 7 watt resistor through lug 4 of terminal strip ED (S-3) to lug 1 of coil EG (NS). Connect the other lead to lug 1 of coil EM (S-1). Position the resistor approximately 1/4" away from the CRT support chassis.

( ) Connect a 4700 Ω (yellow-violet-red) resistor between lugs 1 (S-2) and 2 (NS) of coil EG.

( ) Prepare the following lengths of hookup wire.

COLOR	LENGTH
Orange	5"
Yellow	6"
Yellow	4-3/4"

( ) Remove 3/4" of insulation from one end of a 5" orange wire. Connect this end of the wire from lug 3 of control EN (S-2) to lug 1 of control EP (S-1). Position the other end of the wire through the cutout in the chassis and connect it to lug 2 of terminal strip EF (NS).

( ) Connect a 1" bare wire (use a cut-off resistor lead) from lug 2 of coil EK (S-1) to lug 2 of control EN (S-1).

( ) Connect a 1" bare wire (use a cut-off resistor lead) from lug 2 of coil EM (S-1) to lug 2 of control EP (S-1).

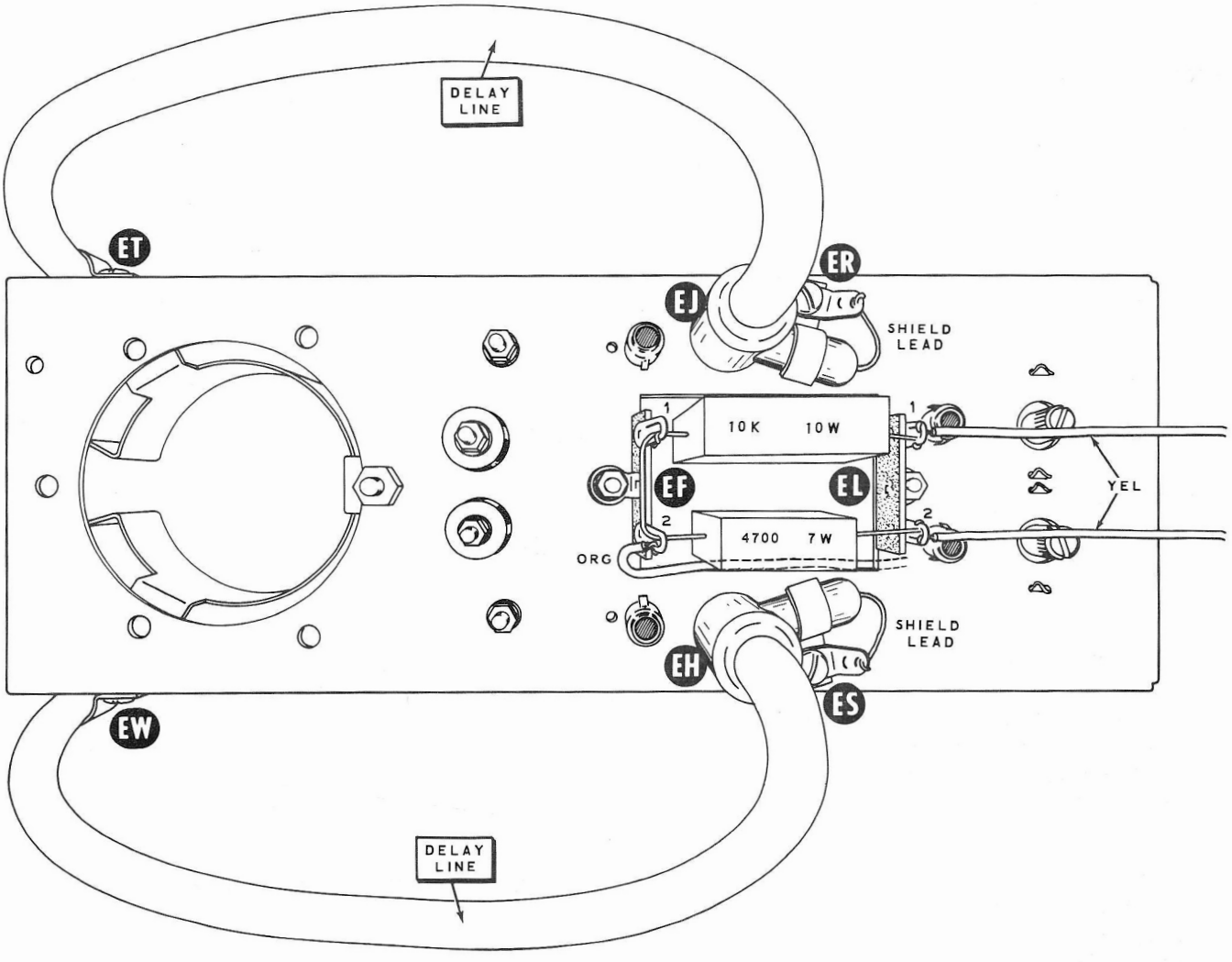

PICTORIAL 3-5

Refer to Pictorial 3-5 for the following steps.

( ) Pass one lead of a 4700 Ω 7 watt resistor through lug 2 (S-3) to lug 1 (NS) of terminal strip EF. Connect the other lead to lug 2 of terminal strip EL (NS).

( ) Connect a 10 KΩ 10 watt resistor from lug 1 of terminal strip EF (NS) to lug 1 of terminal strip EL (NS).

( ) Connect one end of a 6" yellow wire to lug 1 of terminal strip EL (S-2).

( ) Connect one end of a 4-3/4" yellow wire to lug 2 of terminal strip EL (S-2).

Refer to Detail 3-5A for the following steps.

( ) Mount one end of a delay line at EH with a #6 solder lug at ES. Use a 1/2" metal clamp and 6-32 x 3/8" hardware.

( ) Bend the delay line as shown. Secure the delay line with a 1/2" metal clamp at EW with 6-32 x 3/8" hardware. The inside edge of the loop in the delay line should be approximately 4" from the edge of the chassis.

( ) Connect the shield lead of this delay line to solder lug ES (S-1).

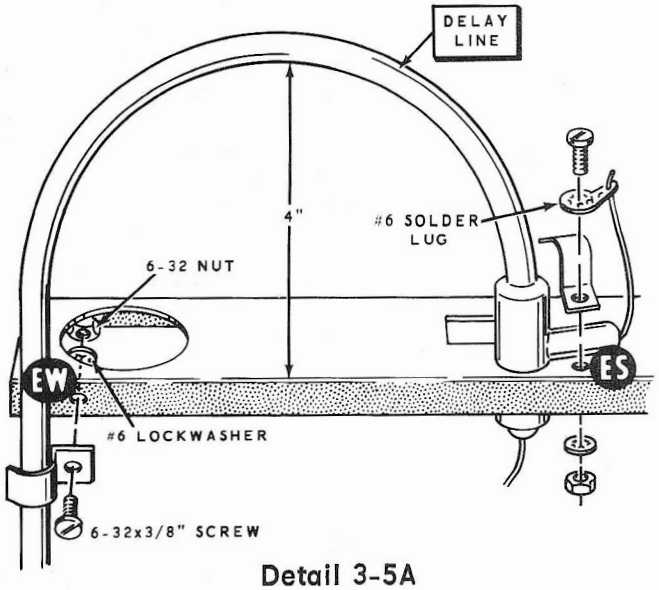

Detail 3-5A

( ) Mount one end of the remaining delay line at EJ with a #6 solder lug at ER. Use 6-32 x 3/8" hardware.

( ) Bend the delay line as before, and secure it with a 1/2" cable clamp at ET. Use a 6-32 x 3/8" hardware.

( ) Connect the shield lead of this delay line to solder lug ER (S-1).

Refer to Pictorial 3-6 for the following steps.

( ) Connect the inner lead of delay line EH to lug 2 of coil EE (S-2).

( ) Connect the inner lead of delay line EJ to lug 2 of coil EG (S-2).

( ) Refer to Detail 3-6A and mount a 2-hole insulator at EU with 6-32 x 1/4" hardware.

Set the CRT support chassis aside until it is called for later.

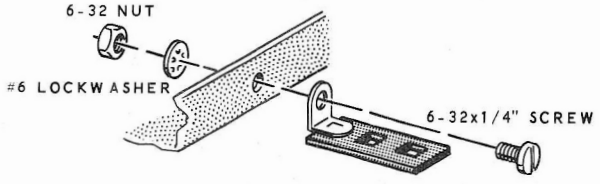

Detail 3-6A

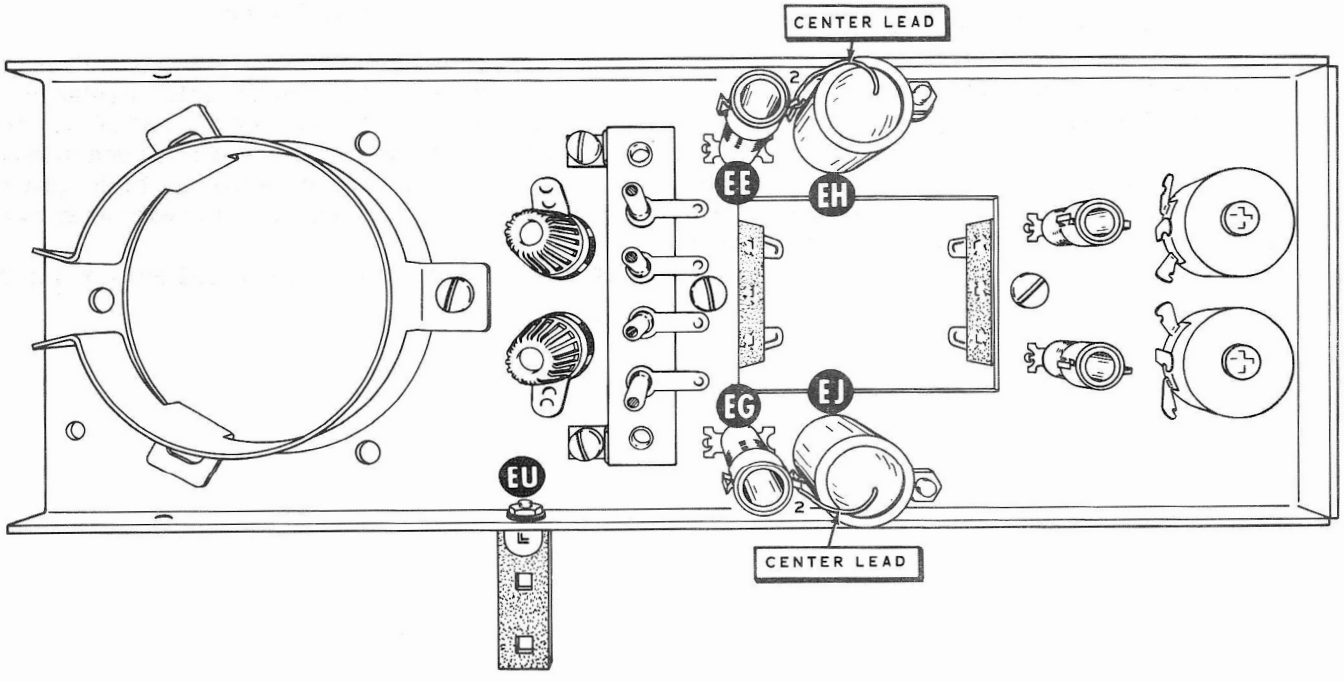

PICTORIAL 3-6

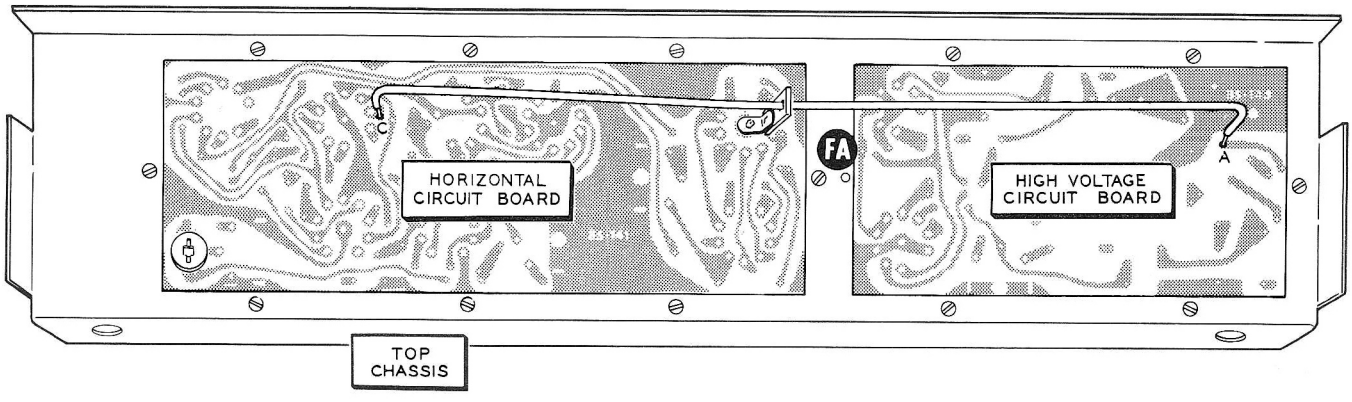

PICTORIAL 3-7

TOP CHASSIS ASSEMBLY

Refer to Pictorial 3-7 for the following steps.

( ) Refer to Detail 3-7A, and mount 4-40 push-on nuts at all circuit board mounting holes on the horizontal circuit board (#85-141-2) and high voltage circuit board (#85-143-1), except the hole located at FA between tube sockets V23 and V24. Be sure the teeth of the push-on nuts are on the foil sides of the circuit boards.

( ) Mount the horizontal circuit board on the top chassis with 4-40 x 3/8" screws. Position the circuit board as shown. Be sure to position the top chassis properly.

( ) Mount the high voltage circuit board on the top chassis with 4-40 x 3/8" screws at all holes except FA. Position the circuit board as shown.

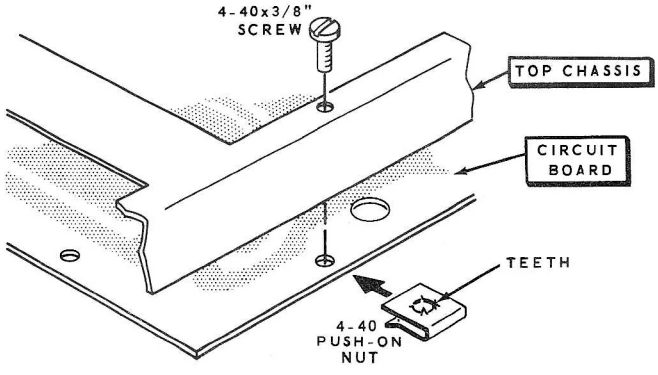

Detail 3-7A

( ) Prepare a 13-1/2" large red wire. Pass the wire through the single hole insulator at tube socket V14. Connect one end of the wire in hole C of the horizontal circuit board (S-1) and the other end in hole A of the high voltage circuit board (S-1). Shape the wire as shown.

Set the chassis aside until called for later.

UNIT ASSEMBLY AND WIRING

This section of the Manual contains the Parts List and Step-By-Step Assembly instructions for the assembly and wiring of the various subassemblies completed at this time.

PARTS LIST #8

Check the remaining parts from pack #8 against the following Parts List. The numbers in parentheses are keyed to the numbers in the Parts Pictorial (fold-out from Page 61).

PART No.	PARTS Per Kit	DESCRIPTION
RESISTORS		
(1) 1-1	1	47 Ω 1/2 watt (yellow-violet-black)
1-23	1	27 KΩ 1/2 watt (red-violet-orange)
CAPACITORS		
(2) 21-70	2	.01 μfd 1.4 KV disc
INSULATOR-CLAMPS-TERMINAL STRIPS		
(3) 73-14	1	CRT anode insulator
(4) 75-71	1	Line cord strain relief
75-30	1	Line cord strain relief (round cord)*
(5) 207-8	2	1/2" metal clamp
(6) 207-19	1	5/16" plastic clamp
(7) 431-14	1	2-lug terminal strip

*This strain relief is supplied to be used in areas mainly outside the U.S., where 2 or 3 wire round cords are required.

PART No.	PARTS Per Kit	DESCRIPTION
LINE CORD-CABLE ASSEMBLIES-WIRE		
89-23	1	3-wire line cord
134-64	1	Yellow wire with spring connectors
134-125	1	Top wiring harness
134-126	1	Bottom wiring harness
343-2	1	Large coaxial cable
344-57	1	Violet wire
TUBES-LAMPS		
411-115	1	5ADP2 or 5ADP31 CRT (cathode ray tube)
411-40	1	6AL5 tube
411-60	1	6AQ5 tube
411-96	2	6AW8 tube
411-71	2	6BQ7A tube
411-208	2	6DJ8 tube
411-170	2	6EW6 tube
411-185	3	6GE5 tube
411-193	5	6GH8 tube
411-168	1	6J11 tube
411-153	1	12AU7 tube
411-24	1	12AT7 tube
411-196	2	12GN7 tube
411-94	1	5651 tube
412-1	2	#47 lamp

PART No.	PARTS Per Kit	DESCRIPTION
KNOBS		
(8) 462-221	3	Red knob with 3/16" hole
462-222	4	Red knob with 1/4" hole
(9) 462-219	6	Black knob with 1/4" hole
(10) 462-220	3	Black knob with through hole
GENERAL		
54-165	1	Low voltage transformer
(11) 65-17	1	Circuit breaker
(12) 206-68	2	Miniature tube shield
211-22	1	Handle with caps
(13) 212-22	1	Shorting link
(14) 260-1	2	Alligator clip
(15) 260-6	1	CRT anode clip
(16) 261-1	4	Push-in rubber foot
(17) 261-2	2	Small rubber foot
(18) 261-6	4	Large rubber foot
(19) 432-27	1	3-prong plug adapter
(20) 434-153	1	14-pin CRT socket
(21) 438-9	1	Coaxial plug
(22) 438-12	1	Coaxial plug insert
(23) 490-1	1	Alignment tool
(24) 100-16-18	3	Red binding post cap
100-16-2	4	Black binding post cap
(25) 414-6	1	Green grid screen
(25) 414-16	1	CRT graticule
391-17	1	Nameplate
597-260	1	Parts Order Form
391-34	1	Blue and white label
HARDWARE		
#6 Hardware		
(26) 250-56	2	6-32 x 1/4" screw
(27) 250-8	4	#6 x 3/8" sheet metal screw
(28) 250-89	6	6-32 x 3/8" screw
(29) 250-276	4	6-32 x 3/8" flat head screw
(30) 250-12	4	#6 x 5/8" sheet metal screw
(31) 250-26	8	6-32 x 5/8" screw
(32) 252-3	14	6-32 nut
(33) 253-45	8	5/32" ID flat washer
(34) 254-1	17	#6 lockwasher
(35) 259-1	1	#6 solder lug
(36) 259-22	1	#6 spade lug

PART No.	PARTS Per Kit	DESCRIPTION
#8 Hardware		
(37) 250-108	2	8-32 x 3/8" self-tapping screw
(38) 250-137	35	8-32 x 3/8" screw
(39) 252-4	31	8-32 nut
(40) 254-2	35	#8 lockwasher
(41) 255-37	2	#8 x 3/4" tapped spacer
#10 Hardware		
(42) 250-50	4	10-32 x 3/8" phillips head screw
(43) 250-242	1	10-24 x 1-1/2" screw
(44) 252-30	1	10-24 nut
(45) 254-3	1	#10 lockwasher
(46) 259-5	2	#10 solder lug
3/8" Hardware		
(47) 252-7	13	3/8-32 control nut
(48) 253-10	13	Control flat washer
Other Hardware		
(49) 250-287	4	Bezel mounting stud
(50) 252-86	4	Knurled nut
(51) 252-87	8	1/4 turn fastener
(52) 253-49	8	Nylon flat washer
(53) 266-87	8	Cabinet mounting stud
(54) 452-12	8	Cabinet mounting stud pin
METAL PARTS		
(55) 100-578	1	CRT shield
(56) 210-29	2	Panel ring
(57) 90-333-1	2	Cabinet shell
(58) 203-436-1	1	Front panel
(59) 204-696	2	Rail
(60) 204-698	1	Short L bracket
(61) 205-511-1	1	Rear access door
(62) 205-512	1	Top trim plate
205-513	1	Bottom trim plate (painted)
(63) 205-514	2	Wide spacer plate
(64) 205-515	2	Narrow spacer plate
(65) 206-288	1	High voltage shield
(66) 206-289	1	Vertical input shield
(67) 210-28	1	Bezel

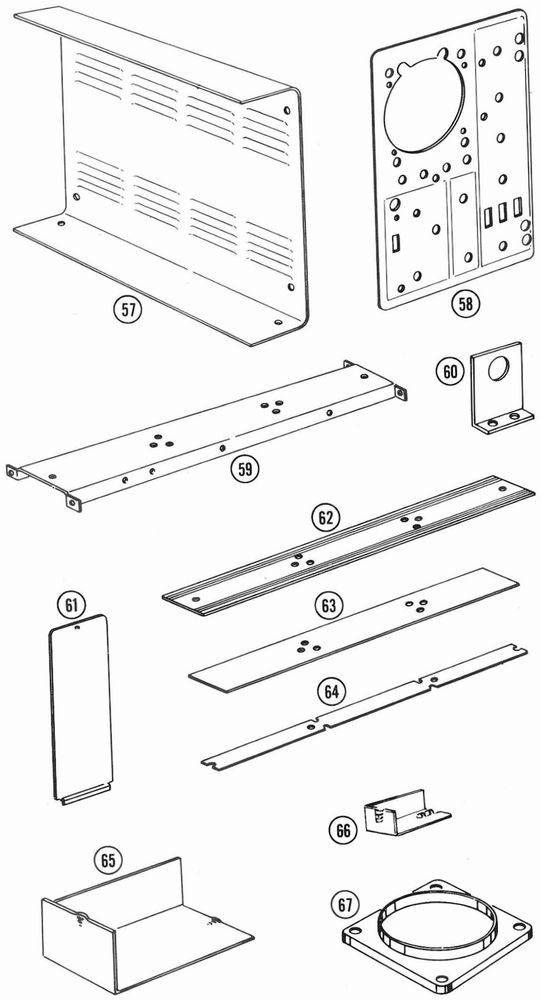

PARTS PICTORIAL

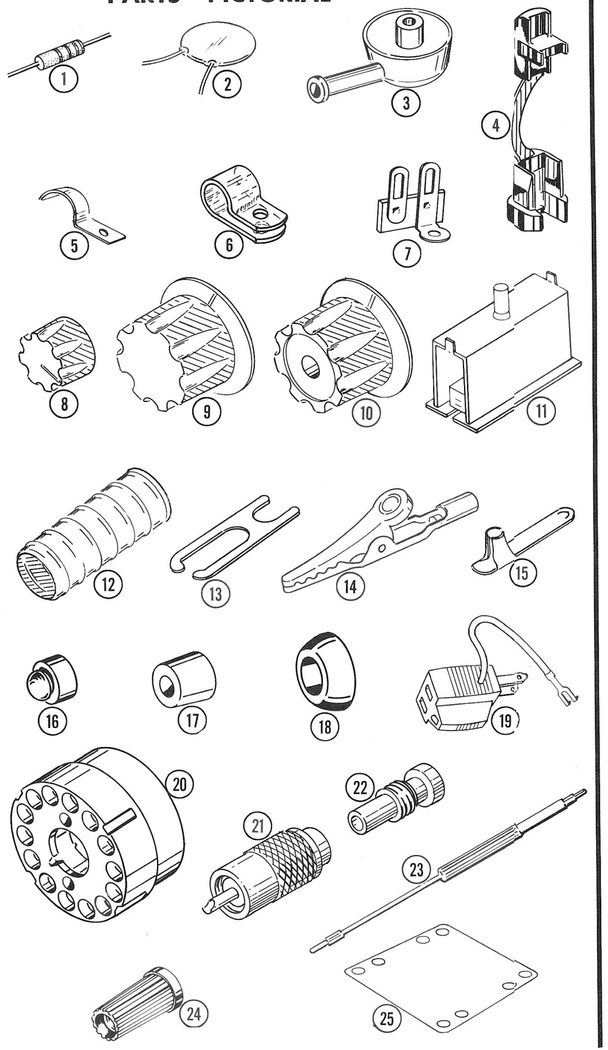

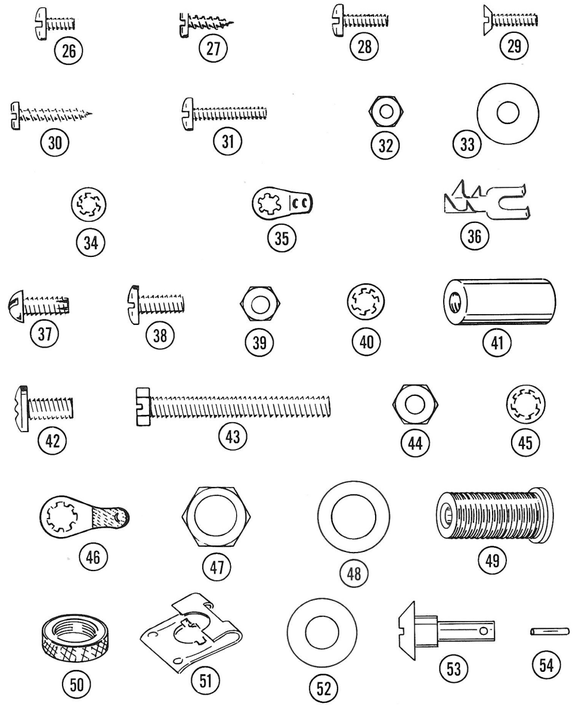

METAL PARTS

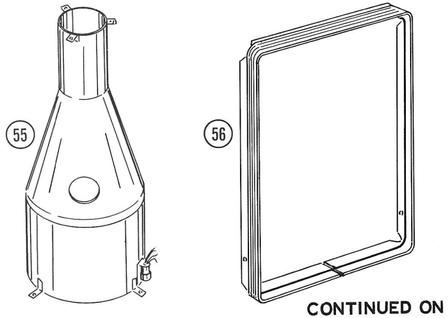

CONTINUED ON PAGE 61

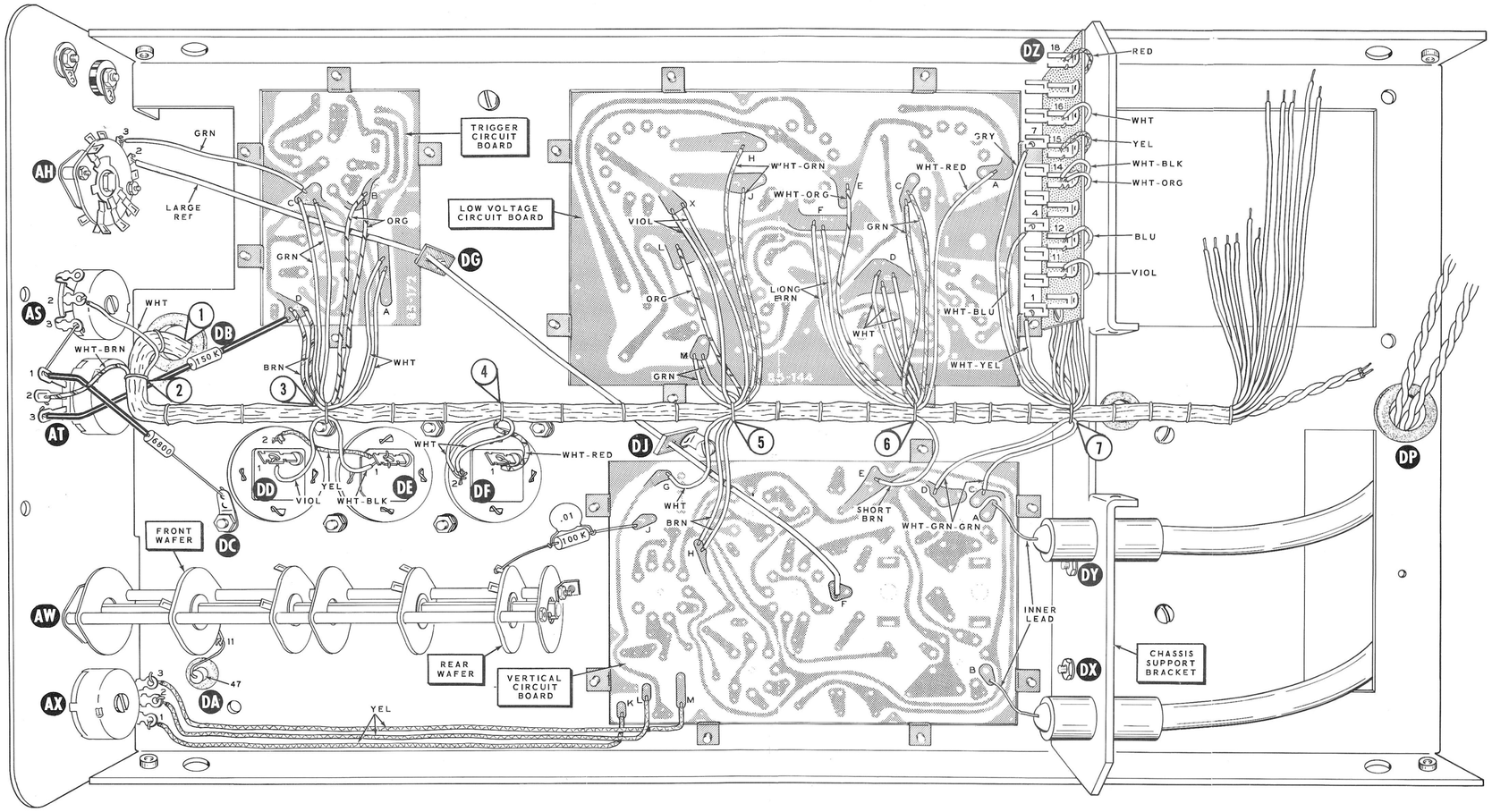

PICTORIAL 4 - 1

STEP-BY-STEP ASSEMBLY

FRONT PANEL, REAR PANEL, AND CRT SUPPORT CHASSIS MOUNTING

Refer to Pictorial 4-1 for the following steps.

( ) Refer to Detail 4-1A, and mount the front subpanel assembly to the bottom chassis. Use 8-32 x 3/8" hardware at the three locations shown. Be very careful not to pinch any wires between the panel and chassis.

( ) Refer to the inset drawing on Detail 4-1A, and install a 6-32 x 1/4" screw and a #6 lockwasher at DH. This screw goes into the angle bracket on switch AW. Position the lockwasher between the angle bracket and the bottom chassis.

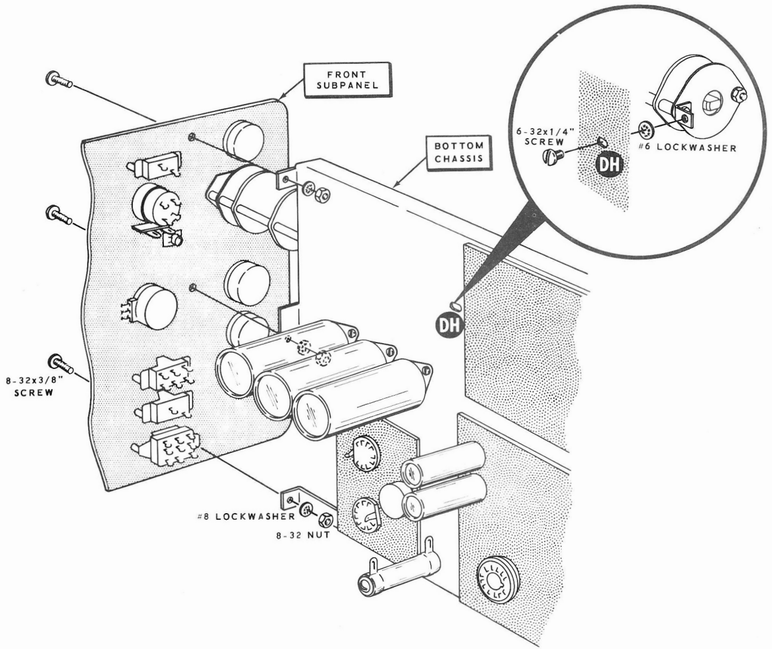

Detail 4-1A

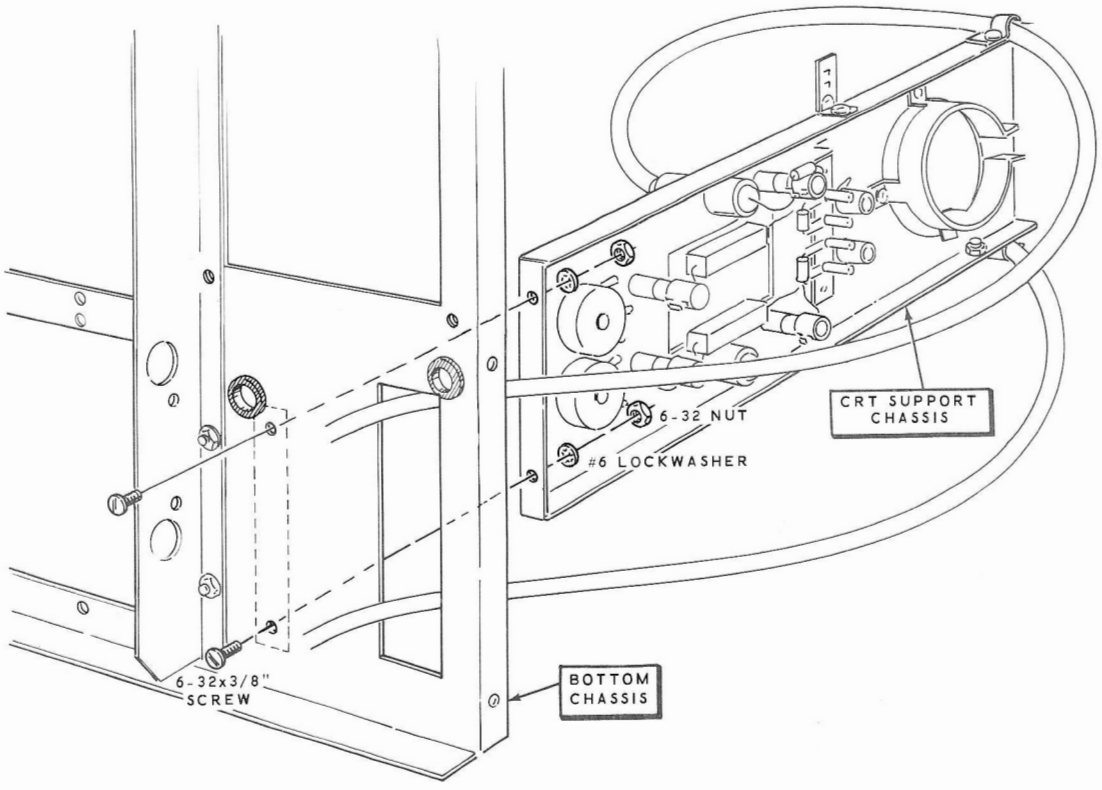

Detail 4-1B

( ) Refer to Detail 4-1B, and mount the CRT support chassis on the bottom chassis with 6-32 x 3/8" hardware.

Refer to Detail 4-1C for the following steps.

NOTE: In the next step, it may be necessary to twist the delay lines about 1/2-turn to make them fit properly. They may be twisted in either direction.

( ) Position the delay lines through the cutout in the bottom chassis and into holes DX and DY in the chassis support bracket.

( ) Secure the delay lines to the chassis support bracket with 1/2" metal clamps. Use 6-32 x 3/8" hardware, and install a #6 solder lug at DX.

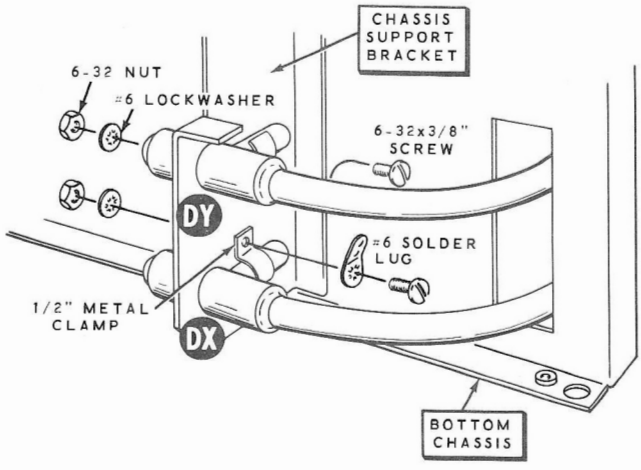

Detail 4-1C

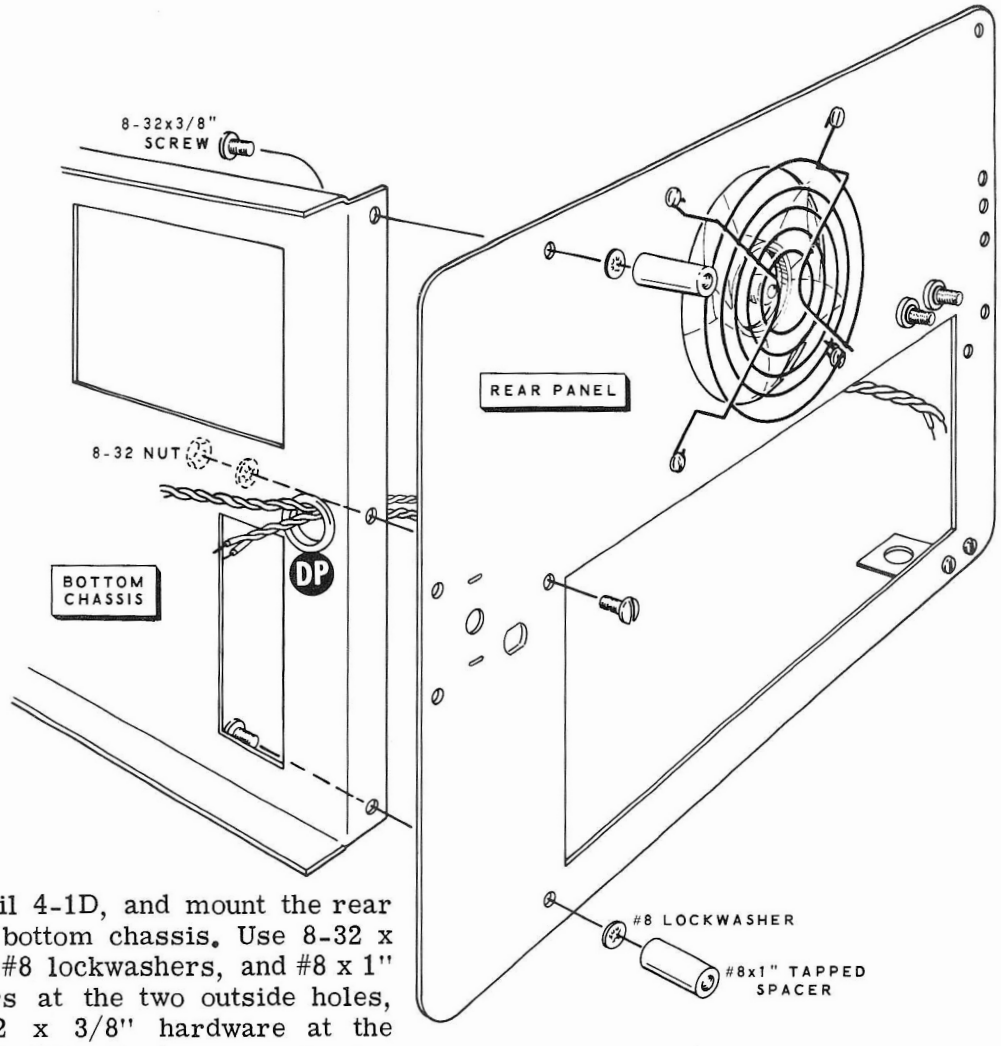

Detail 4-1D

( ) Refer to Detail 4-1D, and mount the rear panel on the bottom chassis. Use 8-32 x 3/8" screws, #8 lockwashers, and #8 x 1" tapped spacers at the two outside holes, and use 8-32 x 3/8" hardware at the center hole. Position the two twisted pairs of wires coming from the rear panel through grommet DP in the bottom chassis.

NOTE: If the delay lines extend through the rear access hole in the rear panel, loosen the cable clamps at the top of the CRT support chassis. Then reposition the delay lines and retighten the cable clamps.

BOTTOM CHASSIS WIRING

Refer to Pictorial 4-1 (fold-out from Page 62) for the following steps.

Connect the wires from control AX to the vertical circuit board as follows:

( ) Wire from lug 1 to hole K (S-1).

( ) Wire from lug 2 to hole L (S-1).

( ) Wire from lug 3 to hole M (S-1).

( ) Cut one lead of a 47 Ω (yellow-violet-black) resistor to 1". Position the body of this resistor in grommet DA, and connect the 1" lead to lug 11 on the front wafer of switch AW (S-1). The other lead of the resistor will be connected later.

( ) Connect the free lead of the resistor-capacitor combination (100 KΩ resistor and .01 μfd disc capacitor) coming from the rear wafer of switch AW, to hole J in the vertical circuit board (S-1).

( ) Place a 1-1/4" length of sleeving on the free lead of the 150 KΩ (brown-green-yellow) resistor coming from lug 3 of control AT. Connect this lead to hole D in the trigger circuit board (S-1).

( ) Connect the free lead of the 6800 Ω (blue-gray-red) resistor coming from lug 1 of control AT, to solder lug DC (S-1). Be sure the other lead of the resistor does not touch the case of the control.

( ) Prepare both ends of a 12-1/2" length of large red wire. Position this wire through the single hole insulators at DG and DJ. Connect one end of the wire to hole F in the vertical circuit board (S-1), and connect the other end to lug 2 of switch AH (S-1).

( ) Connect the free end of the green wire coming from lug 3 of switch AH, to hole C in the trigger circuit board (S-1).

( ) Prepare both ends of a 2-1/4" yellow wire. Connect this wire from lug 2 of capacitor DD (S-1) to lug 1 of capacitor DE (NS).

( ) Connect the inner lead of the delay line at DY to hole A in the vertical circuit board (S-1).

( ) Connect the inner lead of the delay line at DX to hole B in the vertical circuit board (S-1).

BOTTOM HARNESS TO BOTTOM CHASSIS WIRING

Refer to Pictorial 4-2 for the following step.

( ) Locate the bottom wire harness (#134-126) and form it to shape as shown. Position the wires from each BO (breakout) as shown. Then set the wire harness aside temporarily.

Refer to Pictorial 4-1 (fold-out from Page 62) for the following steps.

( ) Pass the end of the bottom wire harness with BO#1 through grommet DB. Position the remaining portion of the harness approximately 1-1/2" above the chassis and along the center of the chassis. BO#7 should be at the front edge of the chassis support bracket.

NOTE: Although some of the wires of the wire harness may seem too long, they should not be cut off. Position any excess wire back along the main trunk of the harness.

Connect the wires from BO#2 as follows:

( ) White to lug 2 of control AS (S-2).

( ) White-brown to lug 2 of control AT (S-1).

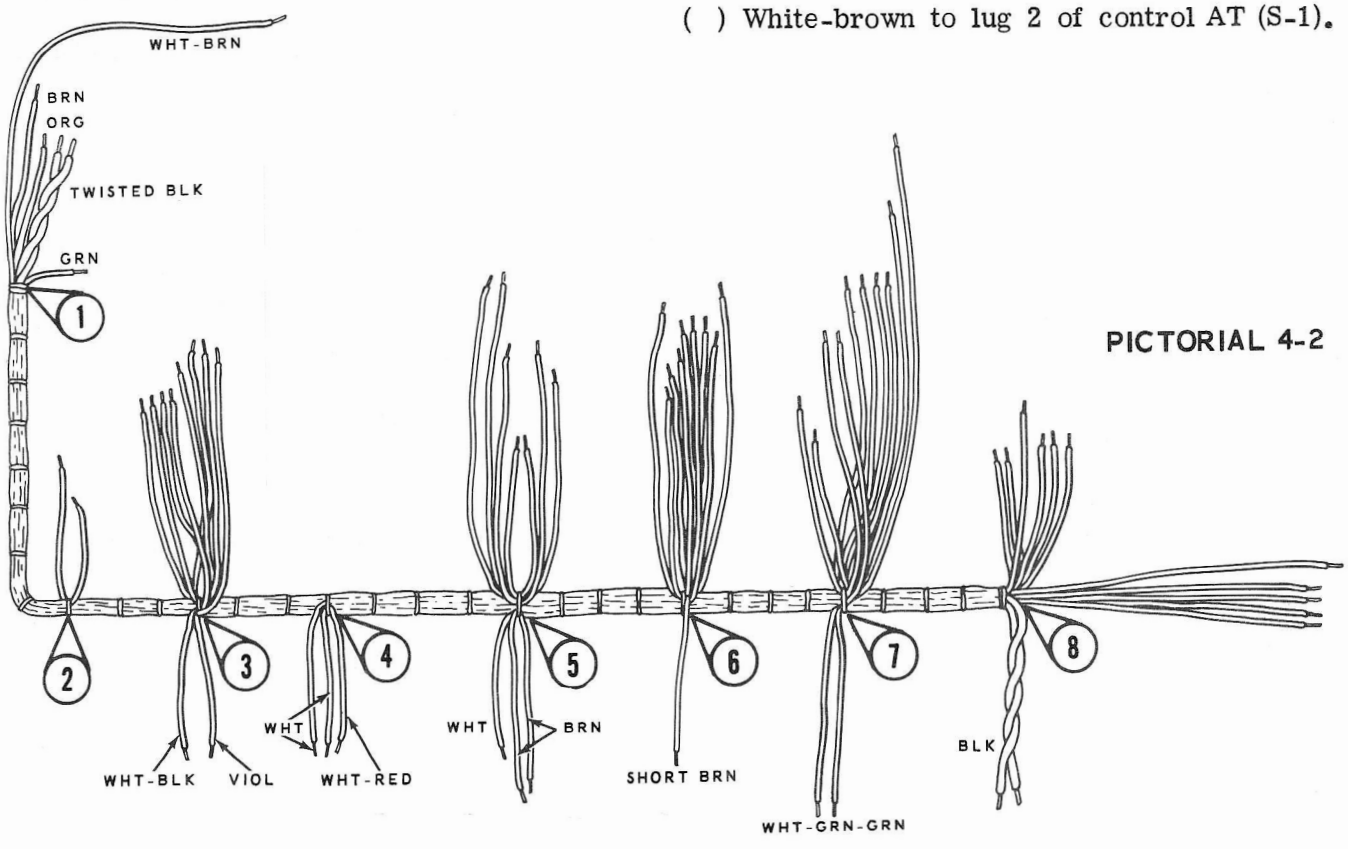

PICTORIAL 4-2

NOTE: At some locations on the circuit boards, more than one wire will be connected to the same foil. The wires can be connected into any unused hole at that location. Also, there may be more holes than required at this time, however other wires are to be connected later and will use these remaining holes.

Connect the following wires from BO#3 to the trigger circuit board:

( ) Both brown to D (S-2).

( ) Both white to A (S-2).

( ) Both green to C (S-2).

( ) Both orange to B (S-2).

( ) Connect the violet wire from BO#3 to lug 1 of capacitor DD (S-1).

( ) Connect the white-black wire from BO#3 to lug 1 of capacitor DE (S-2).

( ) Connect both white wires from BO#4 to lug 2 of capacitor DF (S-2).

( ) Connect the white-red wire from BO#4 to lug 1 of capacitor DF (S-1).

Connect the following wires from BO#5 to the low voltage circuit board:

( ) Both green to M (S-2).

( ) Orange to L (S-1).

( ) Both violet to X (S-2).

( ) Either white-green to J (S-1).

( ) Other white-green to H (S-1).

Connect the following wires from BO#5 to the vertical circuit board:

( ) White to G (S-1).

( ) Both brown to H (S-2).

Connect the following wires from BO#6 to the low voltage circuit board:

( ) Both long brown to F (S-2).

( ) Three white to D (S-3).

( ) White-orange to E (S-1).

( ) Both green to C (S-2).

( ) White-red to A (S-1).

( ) Connect the short brown wire from BO#6 to hole E in the vertical circuit board (S-1).

Connect the following wires from BO#7 to the vertical circuit board:

( ) Either white-green-green (white wire with two green stripes) to hole D in the vertical circuit board (S-1).

( ) Other white-green-green to hole C in the vertical circuit board (S-1).

Connect the following wires from BO#7 to 18-lug terminal board DZ. Remember that the lugs on the terminal board were soldered previously. The solder instructions in the following steps will include those leads already soldered. Do not wrap the ends of these wires around the lugs as they may short against the adjacent lugs.

( ) Gray to lug 7 (S-3).

( ) White-blue to lug 4 (S-3).

( ) White-yellow to lug 1 (S-3).

( ) Red to lug 18 (S-3).

( ) White to lug 16 (S-3).

( ) Yellow to lug 15 (S-3).

( ) White-black and white-orange to lug 14 (S-3).

( ) Blue to lug 12 (S-3).

( ) Violet to lug 11 (NS).

( ) Turn the chassis right-side up and clip off the excess wire ends extending from the lettered side of the circuit boards.

Set the chassis aside temporarily.

TOP HARNESS TO TOP CHASSIS WIRING

Refer to Pictorial 4-3 (fold-out from Page 67) for the following steps.

( ) Position the top wire harness (#134-125) along the top chassis, and shape the wires from each breakout as shown.

Connect the following wires from BO#6 to the high voltage circuit board:

( ) Violet to hole H (S-1).

( ) Yellow to hole F (S-1).

( ) Black to hole E (S-1).

Connect the wires from BO#5 to the high voltage circuit board as follows:

( ) Both green to N (S-2).

( ) Both brown to M (S-2).

( ) Both white to L (S-2).

( ) Either orange to hole J (S-1).

( ) Other orange to hole K (S-1).

Connect the wires from BO#4 to the horizontal circuit board as follows:

( ) Both brown to P (S-2).

( ) Both orange to J (S-2).

( ) Both white to K (S-2).

( ) Either white-green to hole M (S-1).

( ) Other white-green to hole N (S-1).

Connect the wires from BO#3 to the horizontal circuit board as follows:

( ) Both white to X (S-2).

( ) Both green to Z (S-2).

( ) Both brown to V (S-2).

( ) Both orange to T (S-2).

Connect the wires from BO#2 to the horizontal circuit board as follows:

( ) White to hole AL (S-1).

( ) Brown to hole AM (S-1).

( ) Orange to hole AJ (S-1).

( ) Green to hole AK (S-1).

Now position the main trunk of the harness so it is just off the indicated edge of the top chassis. Also, be sure that none of the harness wires cross over the shield line shown in Pictorial 4-3.

Refer to Detail 4-3A for the following steps.

( ) Place the CRT anode insulator on the yellow wire from BO#3.

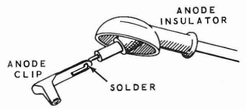

Detail 4-3A

( ) Solder the anode clip on the end of this yellow wire.

NOTE: In the following step, wet the anode clip and wire so the anode insulator will slip over them more easily.

( ) Push the anode insulator over the anode clip as shown in the Pictorial. Then set the top chassis aside temporarily.

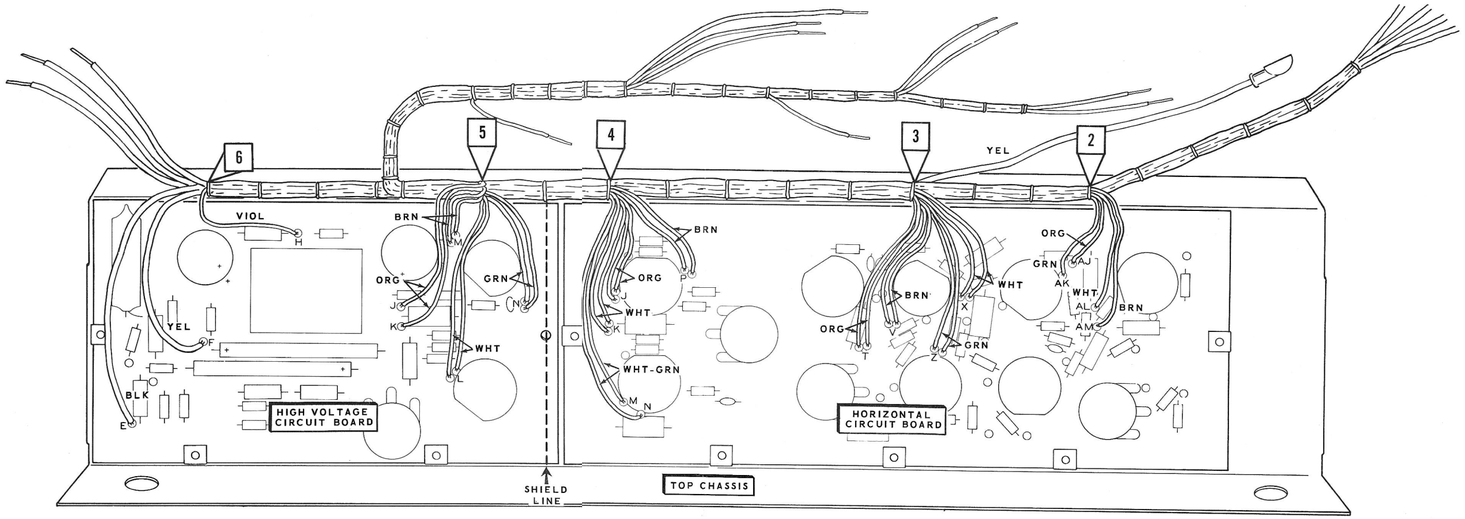

PICTORIAL 4-3

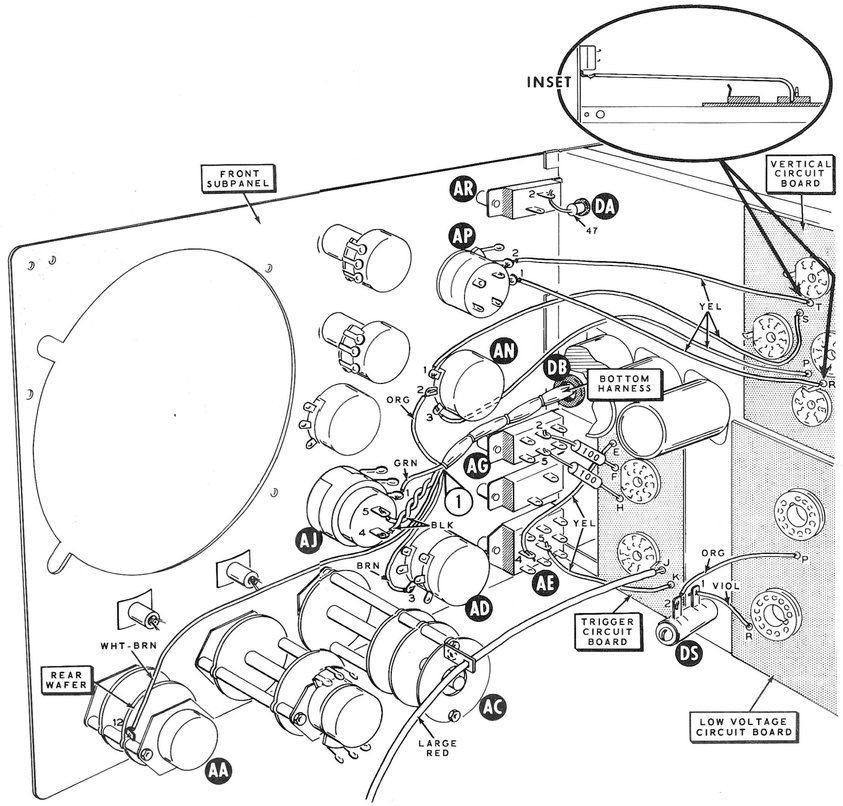

PICTORIAL 4-4

FRONT SUBPANEL TO BOTTOM CHASSIS WIRING

Refer to Pictorial 4-4 for the following steps.

Connect the free ends of the wires and components coming from the front subpanel to the bottom chassis as follows:

( ) Yellow wire from lug 5 of switch AE, to hole K in the trigger circuit board (S-1).

( ) Yellow wire from lug 4 of switch AE, to hole E of the trigger circuit board (S-1).

( ) 100 Ω resistor from lug 5 of switch AG, to hole H in the trigger circuit board (S-1).

( ) 100 Ω resistor from lug 2 of switch AG, to hole F in the trigger circuit board (S-1).

( ) Yellow wire from lug 3 of control AN, to hole P in the vertical circuit board (S-1).

( ) Yellow wire from lug 1 of control AN, to hole S in the vertical circuit board (S-1).

NOTE: The next two wires must be positioned up and away from the chassis as shown in the inset drawing on the Pictorial.

( ) Yellow wire from lug 1 of control AP, to hole R in the vertical circuit board (S-1).

( ) Yellow wire from lug 2 of control AP, to hole T in the vertical circuit board (S-1).

( ) Connect the free lead of the 47 Ω resistor coming through grommet DA of the bottom chassis, to lug 2 of switch AR on the front trim panel (S-2).

Connect the wires from BO#1 of the bottom wire harness to the front subpanel as follows:

( ) Brown to lug 3 of control AD (S-2).

( ) White-brown to lug 12 on the rear wafer of switch AA (S-2).

( ) Green to lug 1 of control AJ (S-1).

( ) Either black to lug 4 of control AJ (S-1).

( ) Other black to lug 5 of control AJ (S-1).

( ) Orange to lug 2 of control AN (S-2).

( ) Prepare the following lengths of hookup wire:

COLOR	LENGTH
Large red	11-3/4"
Violet	2-1/4"
Orange	5"

( ) Pass one end of a 11-3/4" large red wire through the single hole insulator on switch AC. Connect the proper end of the wire in hole J of the trigger circuit board (S-1). The other end will be connected later.

( ) Connect a 2-1/4" violet wire from lug 1 of resistor DS (S-1) to hole R in the low voltage circuit board (S-1).

( ) Connect a 5" orange wire from lug 2 of resistor DS (S-1) to hole P in the low voltage circuit board (S-1).

TOP HARNESS TO FRONT SUBPANEL WIRING

Refer to Pictorial 4-5 (fold-out from Page 69) for the following steps.

Connect the free ends of the wires coming from the CRT support chassis to the vertical circuit board as follows:

( ) Yellow from lug 2 of terminal strip EL, to hole Y (S-1).

( ) Yellow from lug 1 of terminal strip EL, to hole V (S-1).

( ) Refer to Detail 4-5A, and mount the top chassis to the front subpanel and rear panel with 8-32 x 3/8" hardware. Use hardware in only one hole on the front subpanel, as shown.

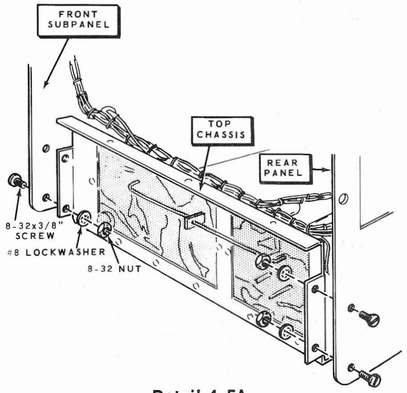

Detail 4-5A

( ) Pass the free end of the top wire harness through grommet DK in the bottom chassis for connection later. Note that the harness passes through the loop formed by the delay line.

( ) Refer to Detail 4-5B, and position a 5/16" cable clamp over the top wire harness and mount it at EX on the CRT support chassis. Use 6-32 x 3/8" hardware.

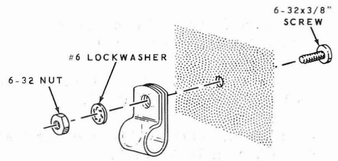

Detail 4-5B

( ) Connect the orange wire from BO#7 of the top wire harness, to lug 1 of terminal strip EF on the CRT support (S-3).

Connect the wires from BO#1 of the top wire harness to the front subpanel as follows:

( ) White-orange to lug 2 of control AK (S-1).

( ) Red to lug 2 of control AL (S-1).

( ) White-brown to lug 2 of control AM (S-1).

( ) Black to lug 1 of control AM (S-1).

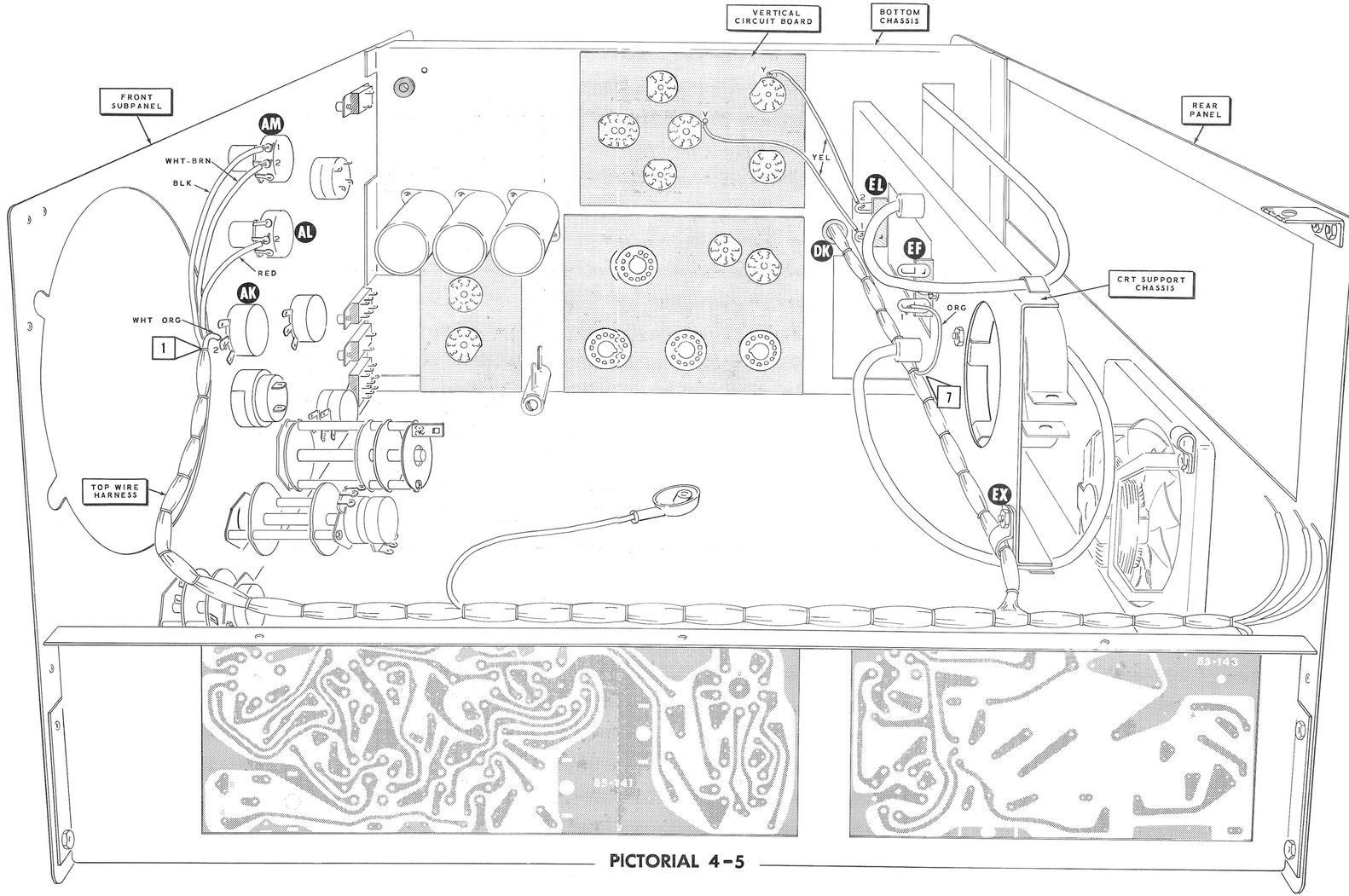

PICTORIAL 4-5

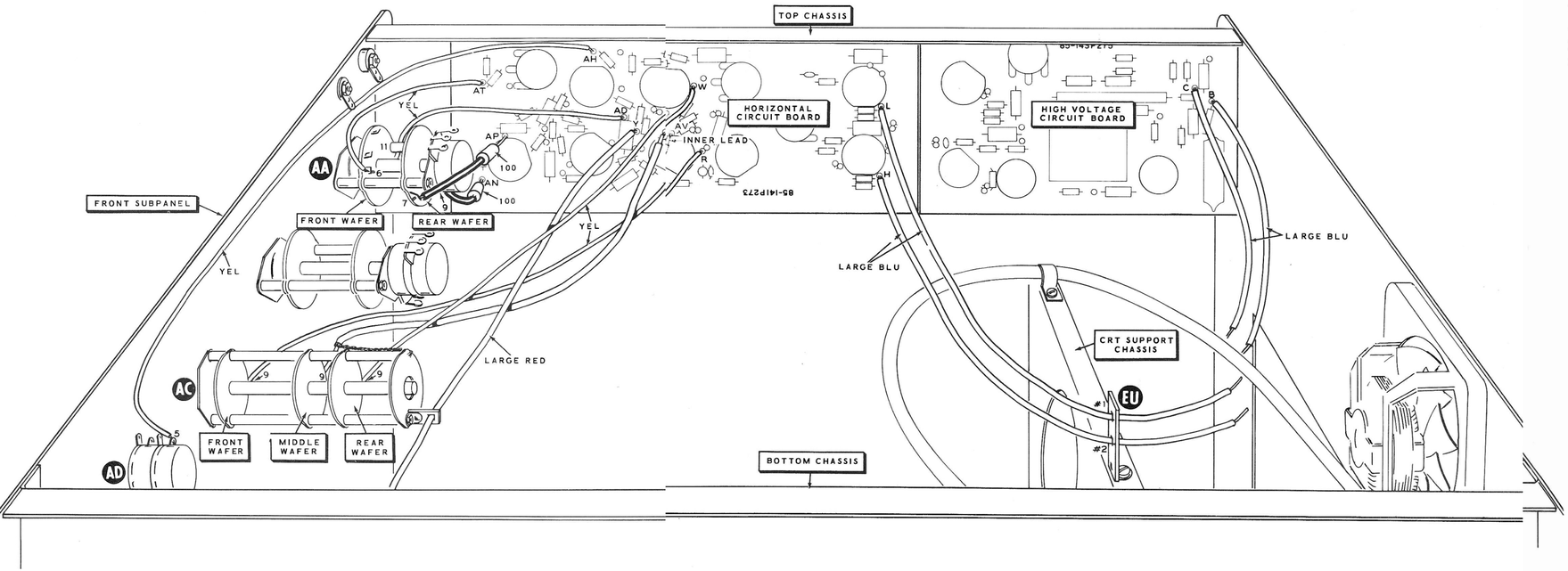

PICTORIAL 4-6

FRONT SUBPANEL TO TOP CHASSIS WIRING

Refer to Pictorial 4-6 (fold-out from Page 70) for the following steps.

Connect the wires from the front subpanel to the horizontal circuit board on the top chassis as follows:

( ) Yellow wire from lug 5 of control AD, to hole AH (S-1).

( ) Yellow wire from lug 6 on the front wafer of switch AA, to hole AT (S-1).

( ) Yellow wire from lug 11 on the front wafer of switch AA, to hole AD (S-1).

( ) 100 Ω resistor from lug 9 on the rear wafer of switch AA, to hole AN (S-1).

( ) 100 Ω resistor from lug 7 on the rear wafer switch AA, to hole AP (S-1).

( ) Large red wire coming through the single hole insulator on switch AC, to hole Y (S-1).

( ) Inner lead of the coaxial cable coming from lug 9 of the middle wafer on switch AC, to hole AV (S-1).

( ) Yellow wire from lug 9 on the front wafer of switch AC, to hole R (S-1).

( ) Yellow wire from lug 9 on the rear wafer of switch AC, to hole W (S-1).

( ) Prepare the following lengths of large blue hookup wire:

12-1/2"
13"
8"
8"

NOTE: Only one end of each wire will be connected in the following four steps. The free ends will be connected later.

( ) Pass one end of a 12-1/2" large blue wire through hole #2 of the 2-hole insulator EU on the CRT support chassis. Connect the proper end of this wire in hole H of the horizontal circuit board (S-1).

( ) Pass one end of a 13" large blue wire through hole #1 of 2-hole insulator EU on the CRT support chassis. Connect the proper end of this wire in hole L of the horizontal circuit board (S-1).

( ) Connect one end of an 8" large blue wire in hole C of the high voltage circuit board (S-1).

( ) Connect one end of another 8" large blue wire in hole B of the high voltage circuit board (S-1).

CRT SHIELD MOUNTING AND WIRING

Refer to Pictorial 4-7 and Detail 4-7A for the following steps.

( ) Remove the 8-32 x 3/8" hardware that holds the top chassis to the front subpanel.

( ) Mount the CRT shield on the front subpanel with 8-32 x 3/8" screws, #8 lockwashers, and bezel mounting studs. Position the CRT shield as shown. Do not tighten the hardware at this time. Be careful not to pinch any wires between the panel and shield.

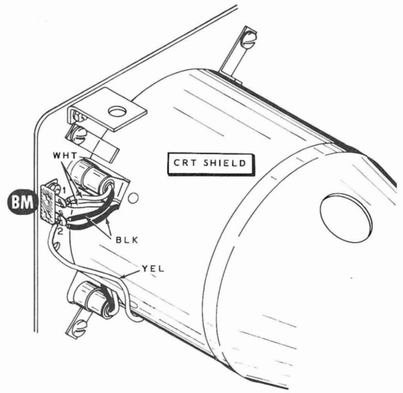

PICTORIAL 4-7

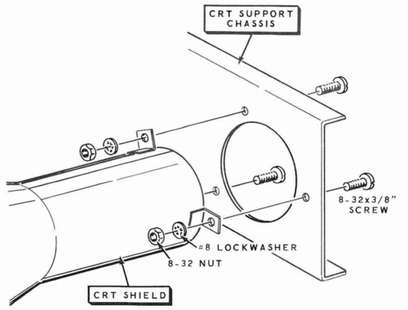

Detail 4-7B

CAUTION: The CRT graticule will be used in the next step. This graticule is made of plastic and will scratch easily, therefore it must be handled with great care. After the next step is completed, return the graticule to its envelope for safe keeping until it is permanently installed.

( ) Position the CRT graticule on the bezel mounting studs. Adjust the positions of the studs, if necessary, so the graticule can be installed and removed easily. Then tighten the CRT shield mounting hardware and remove the graticule.

( ) Install 8-32 x 3/8" hardware in both holes to secure the top chassis to the front subpanel.

( ) Install a 2-lug terminal strip at BM with 6-32 x 1/4" hardware. Position the terminal strip as shown.

( ) Mount the short L bracket at D with 8-32 x 3/8" hardware.

( ) Refer to Detail 4-7B, and secure the rear of the CRT shield to the CRT support chassis with 8-32 x 3/8" hardware.

( ) Connect the free end of the yellow wire coming from lug 2 of control AJ, to lug 2 of terminal strip BM (NS).

NOTE: In the next two steps, the pilot lamp socket leads extending from the CRT shield will be connected. These leads are too long and must be shortened. Measure each lead carefully before it is cut. After a lead is cut to the required length, remove 1/4" of insulation from the lead end; then melt a small amount of solder on the exposed wires. This will hold the small strands together to make a better connection.

( ) Connect both black leads to lug 2 of terminal strip BM (S-3).

( ) Connect both white leads to lug 1 of terminal strip BM (S-2).

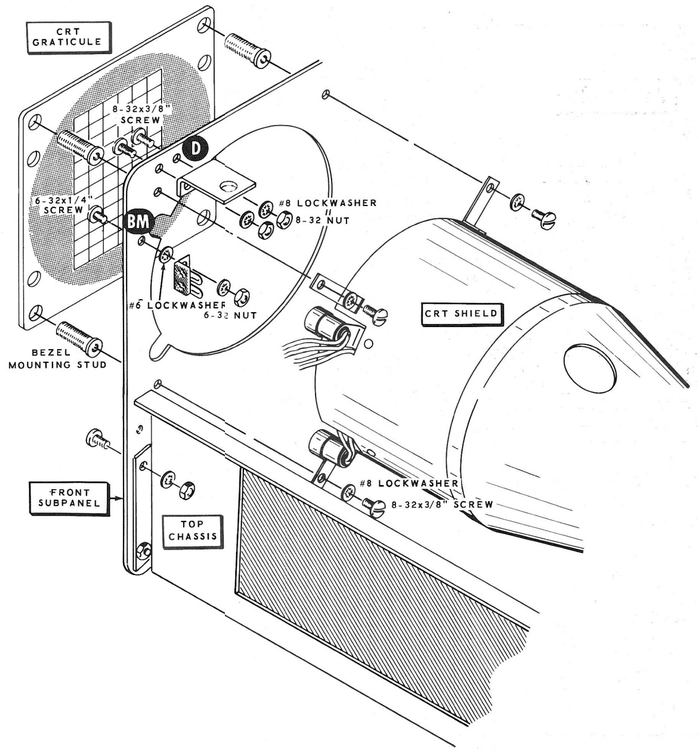

Detail 4-7A

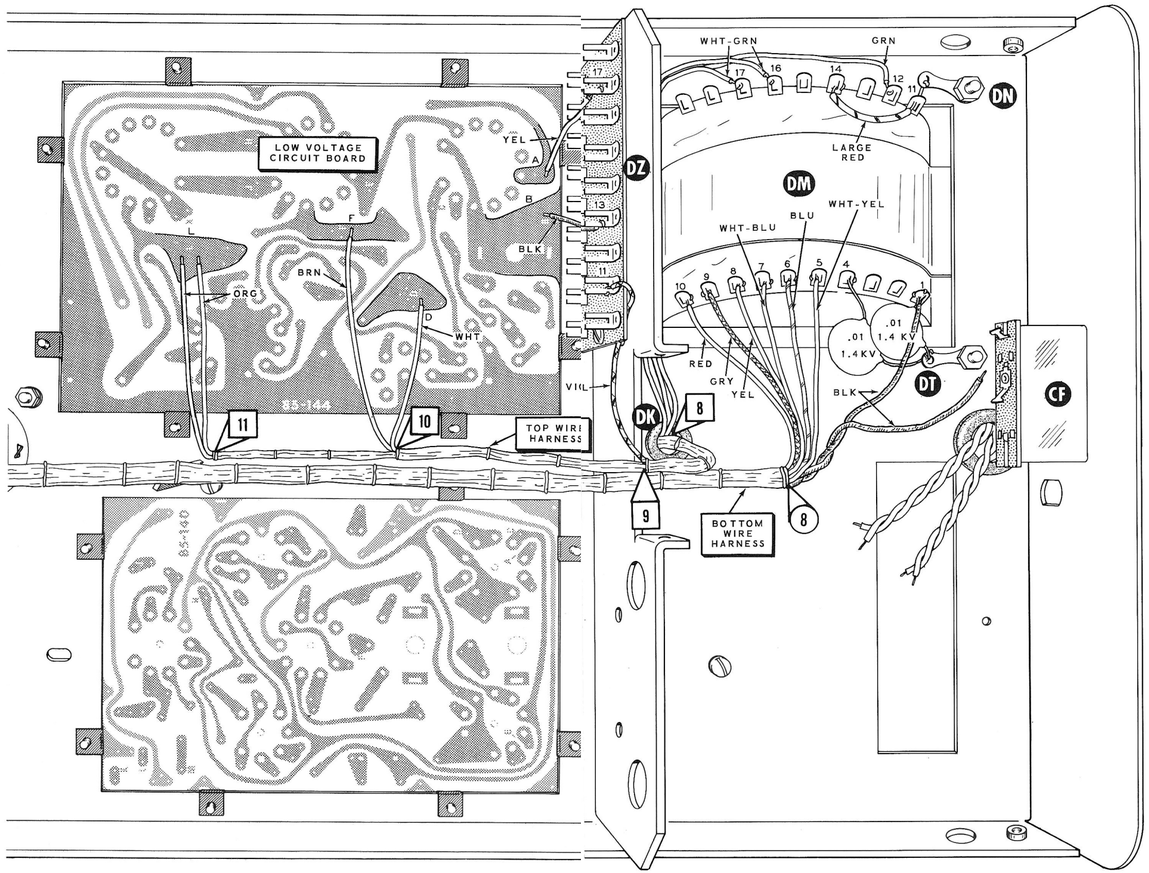

PICTORIAL 4-9

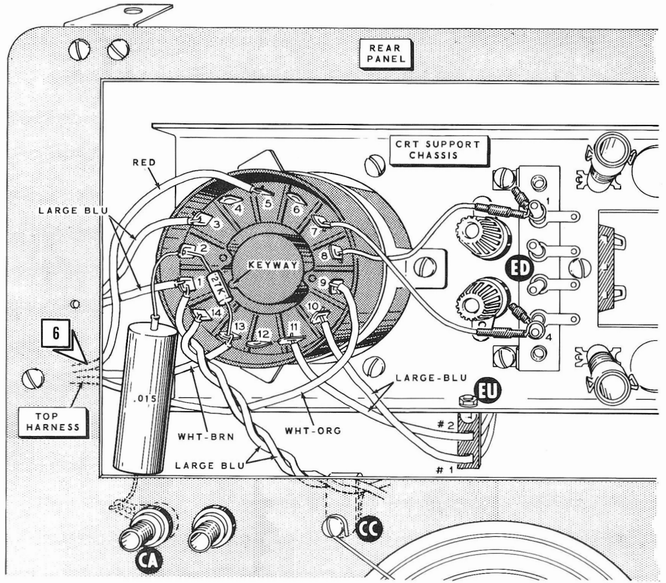

PICTORIAL 4-8

CRT SOCKET WIRING

Refer to Pictorial 4-8 for the following steps.

( ) Refer to Detail 4-8A, and install 8-32 x 3/8" hardware in the two remaining mounting holes of the CRT clamp. Do not tighten the hardware.

( ) Spread the CRT clamp and push the CRT tube socket halfway into the clamp. Position the keyway of the socket as shown.

( ) Refer to Detail 4-8A, and install 10-24 x 1-1/2" hardware in the CRT clamp. Tighten this hardware only enough to hold the CRT tube socket in place. NOTE: The CRT tube socket will be wired in the following steps. Do not shorten any of the wires connected to the socket, as the socket will be moved back when the CRT is installed.

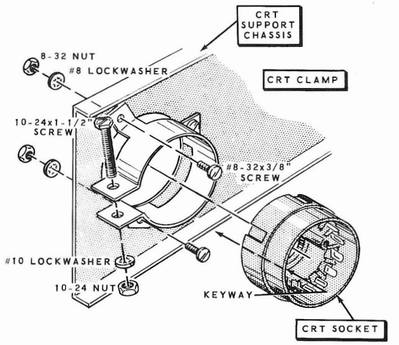

Detail 4-8A

Make the following connections to the CRT tube socket.

( ) Cut both leads of a 27 KΩ (red-violet-orange) resistor to 1/2" in length. Connect this resistor between lugs 13 (NS) and 2 (NS).

( ) Connect the free end of the large blue wire coming through hole #2 of 2-hole insulator EU, to lug 11 (S-1).

( ) Connect the free end of the large blue wire coming through hole #1 of 2-hole insulator EU, to lug 10 (S-1).

( ) Locate the twisted pair of large blue wires coming through the cable clamp at CC on the rear panel. Connect either wire to lug 14 (S-1) and the other to lug 1 (NS).

( ) Connect the large blue wire coming from hole C on the high voltage circuit board, to lug 1 (S-2). Position this wire over the top of the delay line.

( ) Connect the free lead of the .015 μfd tubular capacitor coming from solder lug CA on the rear panel, to lug 2 (S-2).

( ) Connect the large blue wire coming from hole B on the high voltage circuit board, to lug 3 (S-1). Position this wire over the top of the delay line.

Connect the wires from BO#6 of the top wire harness to the CRT tube socket as follows:

( ) White-orange to lug 9 (S-1).

( ) White-brown to lug 13 (S-2).

( ) Red to lug 5 (S-1).

( ) Locate the yellow wire with clips on each end. Measuring from both clip ends, cut two clip-lead assemblies 5" long. Then remove 1/4" of insulation from the free end of each 5" wire, and melt a small amount of solder on the exposed wire ends.

( ) Connect the free end of one of these clip-lead assemblies to lug 8 of the CRT tube socket (S-1). Push the clip at the other end onto pin 1 of 4-pin terminal strip ED.

( ) Connect the free end of the other clip-lead assembly to lug 7 of the CRT tube socket (S-1). Push the clip at the other end onto pin 4 of 4-pin terminal strip ED.

TOP HARNESS TO BOTTOM CHASSIS WIRING

Refer to Pictorial 4-9 (fold-out from Page 72) for the following steps.

CAUTION: The low voltage power transformer will be installed in the next step. Be careful not to bend any of the transformer lugs, or to pinch any wires between the transformer and bottom chassis.

( ) Refer to Detail 4-9A, and mount the low voltage power transformer (#54-165) at DM. Use #8 lockwashers and 8-32 nuts, and install #10 solder lugs at DN and DT. Position the transformer and solder lugs as shown.

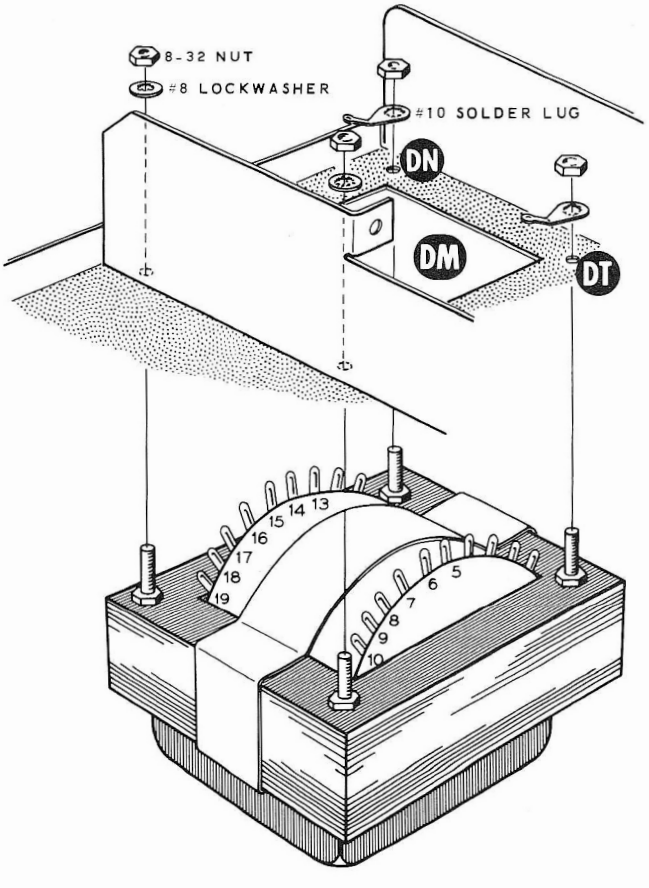

Detail 4-9A

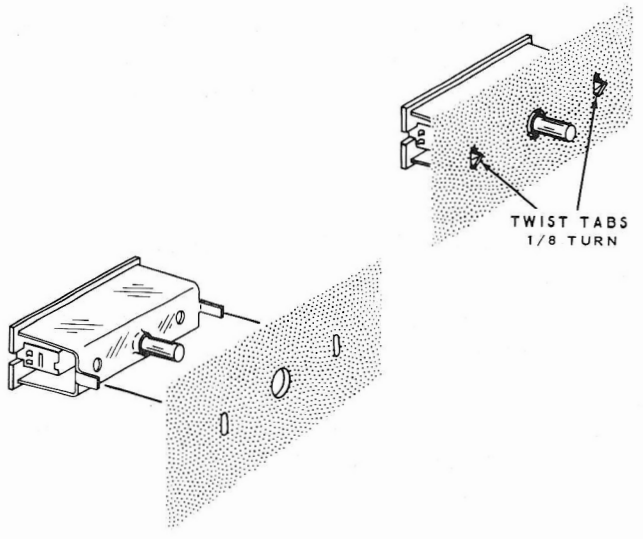

Detail 4-9B

( ) Refer to Detail 4-9B, and mount the circuit breaker at CF. Position the circuit breaker as shown and twist the tabs 1/8 turn.

Position the wires from the free end of the top harness toward the front of the chassis from grommet DK.

( ) Connect the violet wire from BO#9 of the top harness to lug 11 of terminal board DZ (S-3).

Connect the wires from BO#10 of the top wire harness to the low voltage circuit board as follows:

( ) White to D (S-1).

( ) Brown to F (S-1).

( ) Connect both orange wires from BO#11 of the top wire harness, to L on the low voltage circuit board (S-2).

Connect the wires from terminal board DZ to the low voltage circuit board as follows:

( ) Black from lug 13, to hole B (S-1).

( ) Yellow from lug 17, to hole A (S-1).

( ) Prepare the following lengths of large red hookup wire:

3"
1-3/4"

( ) Remove 1" of insulation from one end of a 3" large red wire. Pass this end of the wire through lug 11 of transformer DM (S-2) to solder lug DN (S-1). Connect the other end to lug 14 of transformer DM (S-1).

( ) Connect a .01 μfd 1.4 KV disc capacitor from lug 4 of transformer DM (NS) to solder lug DT (NS).

( ) Connect a .01 μfd 1.4 KV disc capacitor from lug 1 of transformer DM (NS) to solder lug DT (S-2).

Connect the wires from BO#8 of the top wire harness to transformer DM as follows:

( ) Either white-green to lug 17 (NS).

( ) Other white-green to lug 16 (NS).

( ) Green to lug 12 (NS).

BOTTOM HARNESS TO TRANSFORMER WIRING

Refer to Pictorial 4-9 for the following steps.

Connect the following wires from BO#8 of the bottom wire harness to transformer DM.

( ) Red to lug 10 (S-1).

( ) Gray to lug 9 (S-1).

( ) Yellow to lug 8 (S-1).

( ) White-blue to lug 7 (S-1).

( ) Blue to lug 6 (S-1).

( ) White-yellow to lug 5 (S-1).

( ) Either black to lug 1 (NS).

Refer to Pictorial 4-10 (fold-out from Page 83) for the following steps.

( ) Pass the large blue twisted pair of wires extending from grommet DP under the bare wire connected to solder lug DN.

Connect this same pair of twisted wires to transformer DM as follows:

( ) Either large blue to lug 18 (S-1).

( ) Other large blue to lug 19 (S-1).

NOTE: The following pair of twisted wires are too long and must be cut to length. After they are cut, remove 1/4" of insulation from the end of each wire; then melt a small amount of solder on the exposed end of each wire.

Connect the black twisted pair of wires extending from grommet DP to transformer DM as follows:

( ) Either black to lug 1 (NS).

( ) Other black to lug 2 (NS).

ALTERNATE LINE VOLTAGE WIRING

Following are two sets of instructions, one for 120 VAC line voltage and the other for 240 VAC line voltage. Use only the instructions that coincide with the line voltage in your area.

240 VAC Wiring

Refer to the inset drawing on Pictorial 4-10 for the following steps.

( ) Prepare both ends of a 1-1/4" large red wire. Connect this wire between lugs 2 (S-1) and 3 (S-1) of transformer DM.

( ) Now, solder lugs 1 (S-3) and 4 (S-2) of transformer DM.

120 VAC Wiring

Refer to Pictorial 4-10 for the following steps.

( ) Prepare the ends of two 2" lengths of large red hookup wire.

( ) Connect a 2" large red wire between lugs 1 (S-4) and 3 (S-1) of transformer DM.

( ) Connect a 2" large red wire between lugs 2 (S-2) and 4 (NS).

Refer to Pictorial 4-10 for the following steps.

Connect the following wires from BO#8 of the bottom wire harness to transformer DM:

CAUTION: Do not use the white-green-green wires (white wire with two green stripes) in the following two steps.

( ) Either white-green to lug 17 (S-2).

( ) Other white-green to lug 16 (S-2).

( ) Either white-green-green to lug 15 (S-1).

( ) Other white-green-green to lug 13 (S-1).

( ) Green to lug 12 (S-2).

( ) Connect the remaining black wire from BO#8 of the bottom wire harness, to lug 2 of circuit breaker CF (S-1).

( ) Connect the shield leads to both delay lines to solder lug DX (S-2).

( ) Locate the line cord and separate the two outside leads to a length of 3-1/2" from the exposed lead ends. Then cut 1-1/2" off one of the outside leads and remove 1/4" insulation from the end. Melt a small amount of solder on the exposed end of each lead.

( ) Refer to Detail 4-10A, and install a #6 spade lug on the end of the green line cord lead (S-1).

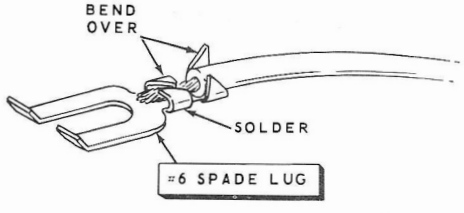

Detail 4-10A

Pass the free end of the line cord through hole CE of the rear panel and connect the leads as follows:

( ) Ribbed outside lead to lug 4 of transformer DM (S-3).

( ) Other outside lead to lug 1 of circuit breaker CF (S-1).

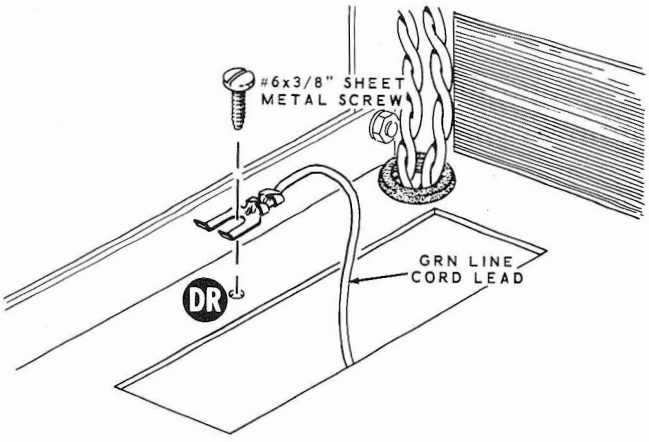

Detail 4-10B

( ) Refer to Detail 4-10B, and secure the green line cord lead at DR on the top side of the bottom chassis with a #6 x 3/8" sheet metal screw.

( ) Refer to Detail 4-10C, and install the proper line cord strain relief at CE. The strain relief shown is for the flat line cord supplied with the kit. If a round line cord is used, the other strain relief must be used.

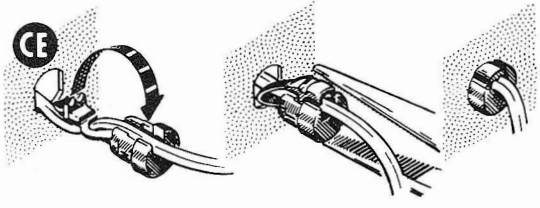

Detail 4-10C

This completes the wiring of the kit. Check the wiring carefuly and remove any wire clippings or solder splashes. Inspect both sides of all circuit boards and cut off the excess wire from any lead that may touch the lead of another component or an adjacent foil.

TOP AND BOTTOM RAIL ASSEMBLY AND MOUNTING

Refer to Pictorial 4-11 (fold-out from Page 83) and Detail 4-11A for the following steps.

( ) Assemble the top rail, using a rail (#204-696), a wide spacer plate (#205-514), a narrow spacer plate (#205-515), the top trim plate (#205-512), and the handle with clips. Temporarily install a 10-32 x 3/8" phillips head screw in the hole at each end of the assembly to hold these pieces in place, and to center the narrow spacer plate.

( ) Install the handle with 6-32 x 5/8" hardware. The handle caps can be installed easily if they are first positioned on the handle ends. Turn the rail assembly over on an edge of a table, then push on the assembly until the caps snap into place.

( ) Remove the 10-32 x 3/8" screws from each end of the assembly.

( ) Mount the top rail assembly with 8-32 x 3/8" hardware at the front subpanel and rear panel, and #6 x 3/8" sheet metal screws through the top rail assembly into the top chassis. Be sure the side of the rail with the screw holes faces the top chassis, as it is shown in Pictorial 4-11.

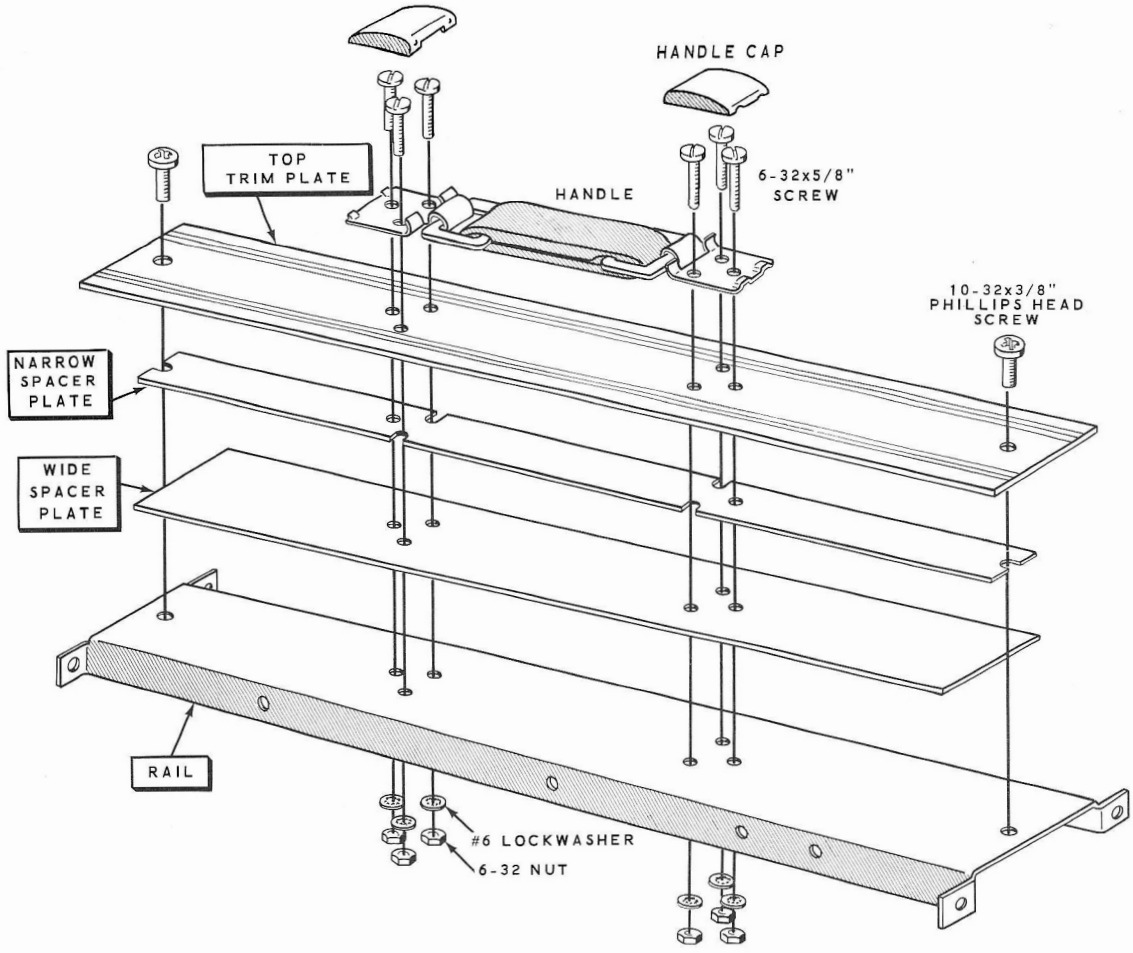
HANDLE CAP
TOP TRIM PLATE
HANDLE
6-32x5/8" SCREW
10-32x3/8" PHILLIPS HEAD SCREW
NARROW SPACER PLATE
WIDE SPACER PLATE
RAIL
#6 LOCKWASHER
6-32 NUT

Detail 4-11A

Refer to Pictorial 4-12 for the following steps.

NOTE: The bottom rail assembly in the next two steps is very similar to that of the top rail assembly shown in Detail 4-11A on Page 77.

( ) Assemble the bottom rail, using a rail (#204-696), a wide spacer plate (#205-514), a narrow spacer plate (#205-515), and the painted bottom trim plate (#205-513). Temporarily install a 10-32 x 3/8" phillips head screw in the hole at each end of the assembly to hold these pieces in place.

( ) Install 6-32 x 5/8" hardware at the two center holes of the assembly.

( ) Remove the 10-32 x 3/8" screw from each end of the assembly.

NOTE: The self-tapping screws used in the following step can be installed easily if they are turned in approximately two turns, and then backed outward one turn. Repeating this procedure until the screw is about halfway in helps to clean the threads.

( ) Mount the bottom rail assembly with 8-32 x 3/8" hardware at the front subpanel and rear panel, and 8-32 x 3/8" self-tapping screws through the chassis support bracket into the bottom rail assembly.

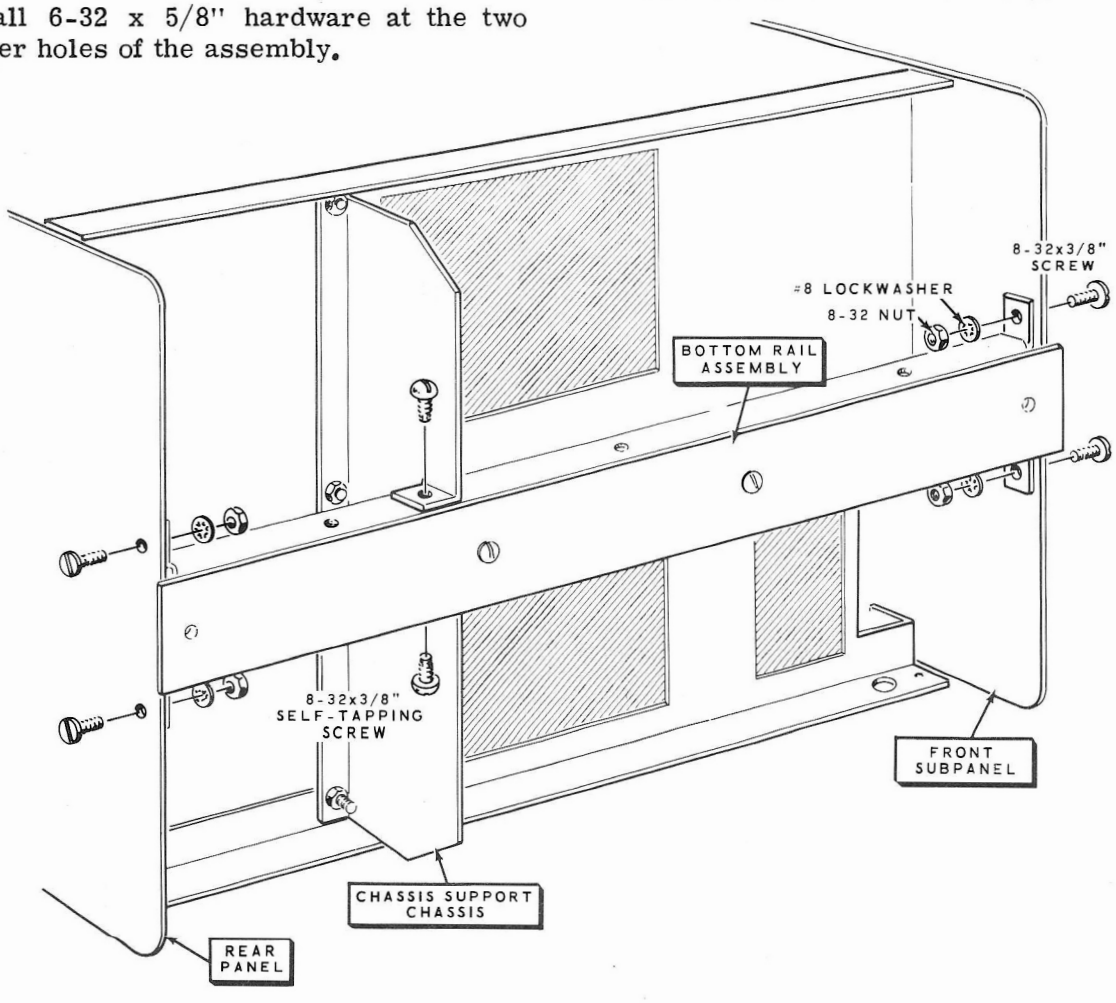

PICTORIAL 4-12

VERTICAL SHIELD AND FRONT PANEL MOUNTING

Refer to Pictorial 4-13 for the following steps.

( ) Refer to Detail 4-13A, and mount the vertical input shield with #6 x 5/8" sheet metal screws.

( ) Install push-in feet at the four indicated holes around the CRT hole in the front panel.

( ) Install the front panel on the front subpanel. Secure the front panel in place using 3/8" control flat washer, and a 3/8-32 control nut on each switch and control bushing.

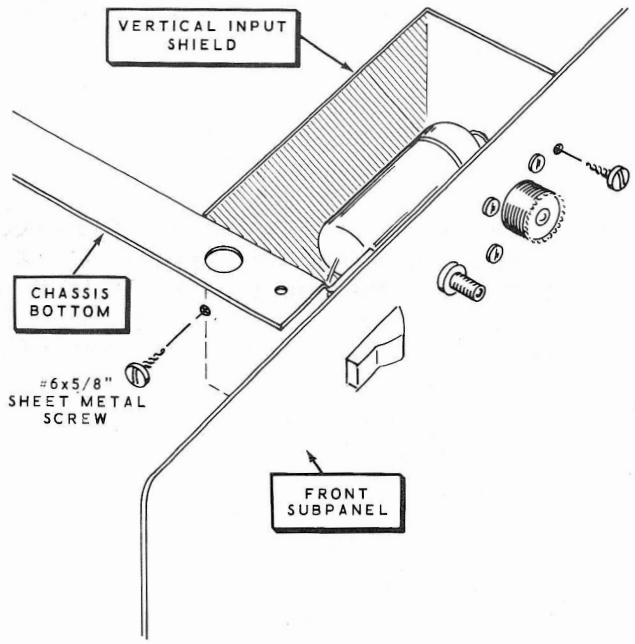

Detail 4-13A

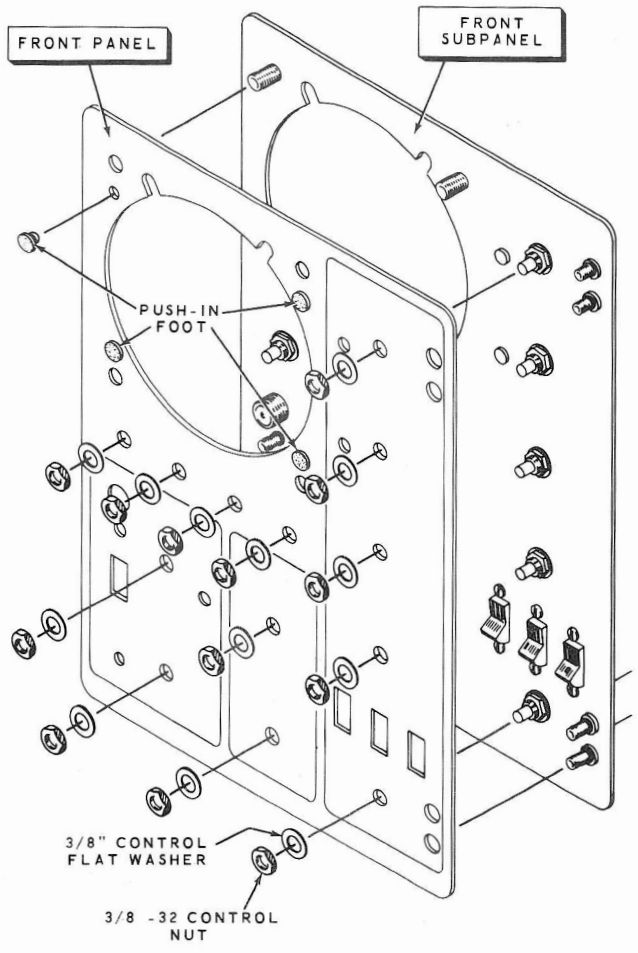

PICTORIAL 4-13

PANEL RING MOUNTING

Refer to Pictorial 4-14 for the following steps.

( ) Mount a panel ring (#210-29) on the front panel with 10-32 x 3/8" phillips head screws at the top and bottom, and 6-32 x 3/8" flat head screws on the sides.

( ) In the same manner, install a panel ring on the rear panel with 10-32 x 3/8" phillips head screws at the top and bottom, and 6-32 x 3/8" flat head screws at the sides.

( ) Install a #47 pilot lamp in each of the two sockets directly above the CRT hole.

KNOB AND CRT INSTALLATION

Refer to Pictorial 4-15 for the following steps.

( ) Rotate all front panel switch and control shafts fully counterclockwise.

( ) Refer to Detail 4-15A, and install the three black knobs with through holes at the Hor. Display, Multiplier, and Trigger Level positions. Position each pointer as shown.

( ) In a like manner, install red knobs with 3/16" holes at these same locations. Position the pointers as shown.

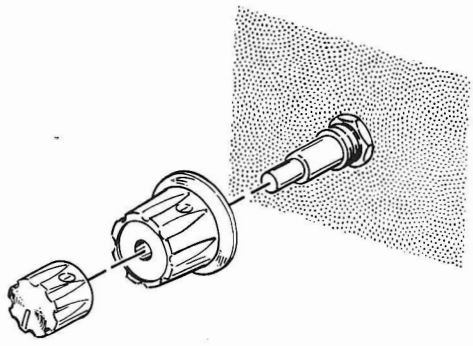

Detail 4-15A

( ) Install the red knobs with 1/4" holes at the Intensity, Focus, Astig., and Scale Ilum. positions.

( ) Install the black knobs with 1/4" holes on the remaining switch and control shafts.

( ) Install red binding post caps at the two locations indicated.

( ) Install black binding post caps on the remaining three binding post bases.

( ) Slightly spread the open end of each of these binding posts by inserting a phillips screwdriver into it; then tap the screwdriver into it; then tap the screwdriver lightly. This will keep the binding post caps from coming off.

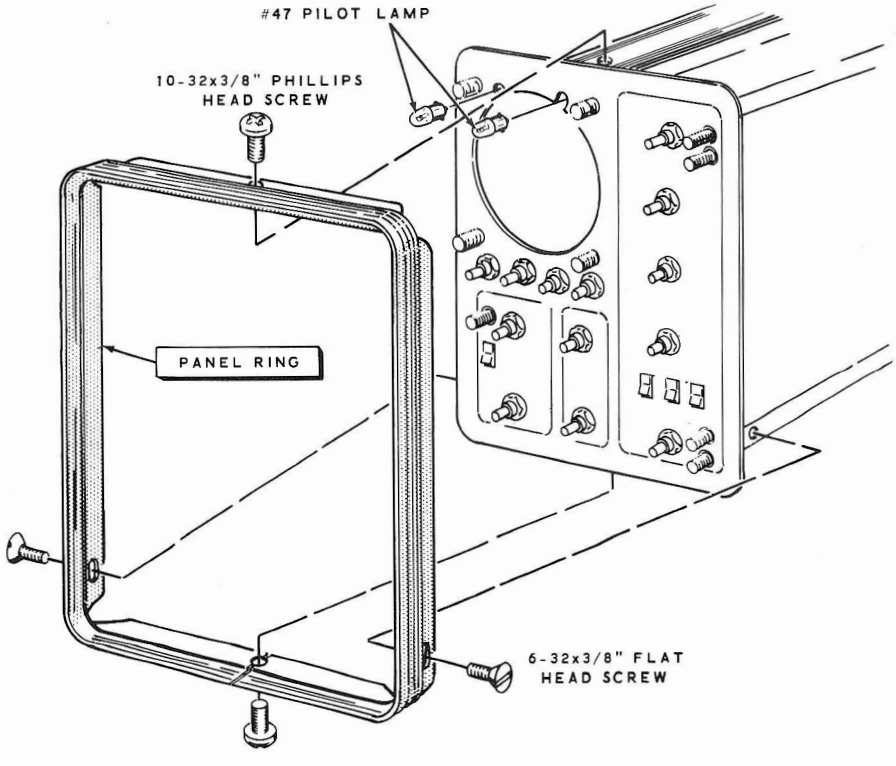

PICTORIAL 4-14

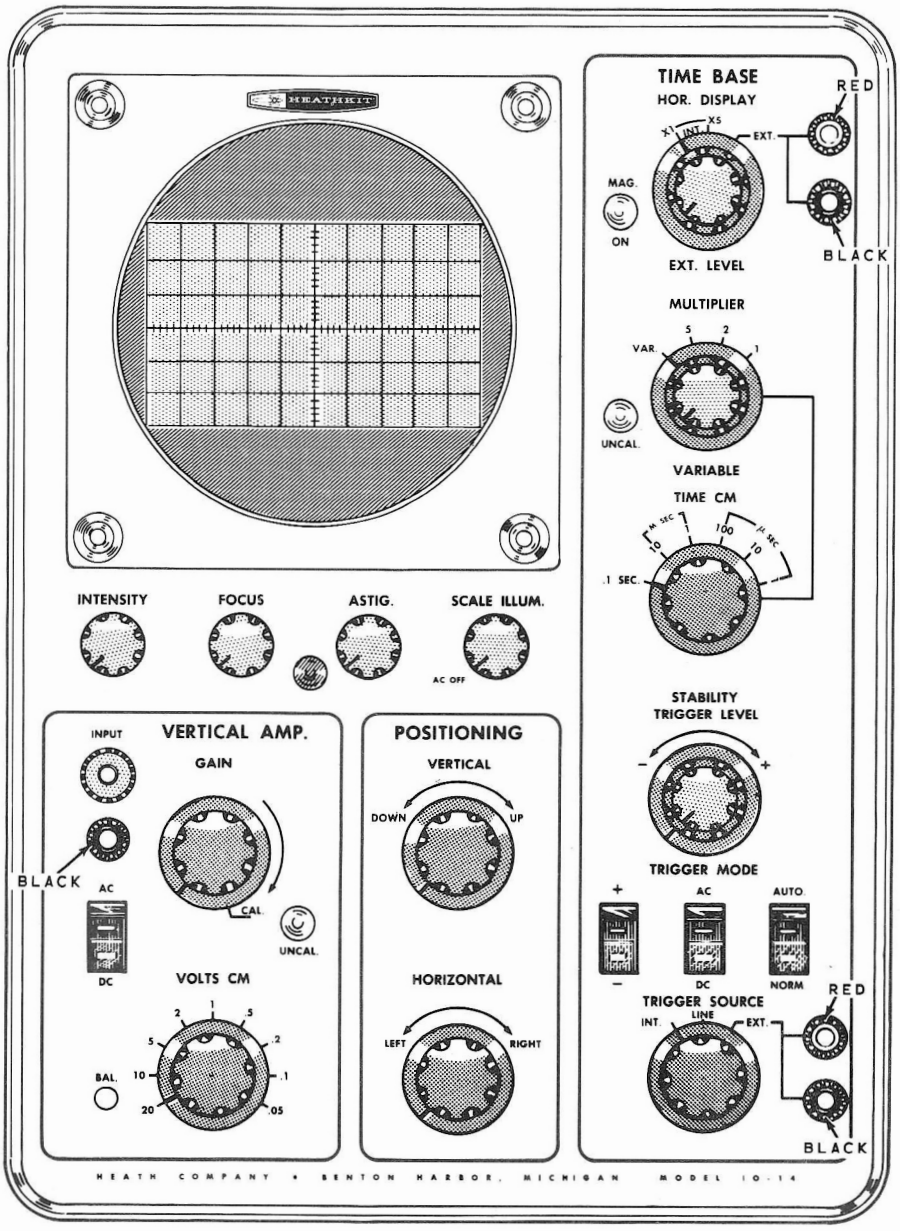

PICTORIAL 4-15

CAUTION: Extreme care must be exercised when handling the CRT (cathode ray tube) due to its high vacuum. DO NOT strike, scratch, or subject the CRT to more than moderate pressure at any time. Never lift the CRT by its neck. A fracture of the glass could result in an implosion of considerable violence capable of causing personal injury.

( ) Carefully unpack the CRT. Align the key of the CRT plug with the keyway of the CRT socket; then insert the CRT into the CRT shield. Push the CRT in until it is plugged into the socket.

( ) Loosen the retaining screw in the CRT socket clamp.

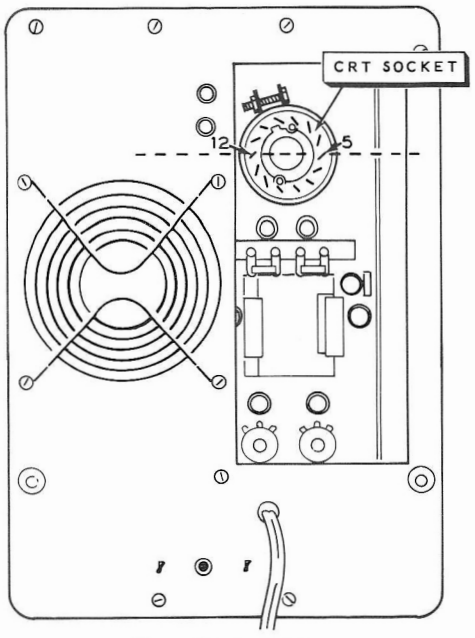

Detail 4-15B

( ) Refer to Detail 4-15B, and rotate the CRT so an imaginary line through lugs 5 and 12 of the CRT socket would be parallel to the top of the rear panel.

( ) Now, without rotating the CRT, push it into the CRT shield until its face is flush with the front surface of the push-in feet.

( ) Now tighten the retaining screw and mounting screws of the CRT mounting clamp. Tighten the retaining screw only enough to hold the CRT in place.

( ) Push the anode clip onto the anode pin on the side of the CRT.

Refer to Detail 4-15C for the following steps.

( ) Install the green grid screen, CRT graticule, and the bezel. Position the bezel with the wide section of the ring as shown. Use 3/8" knurled nuts.

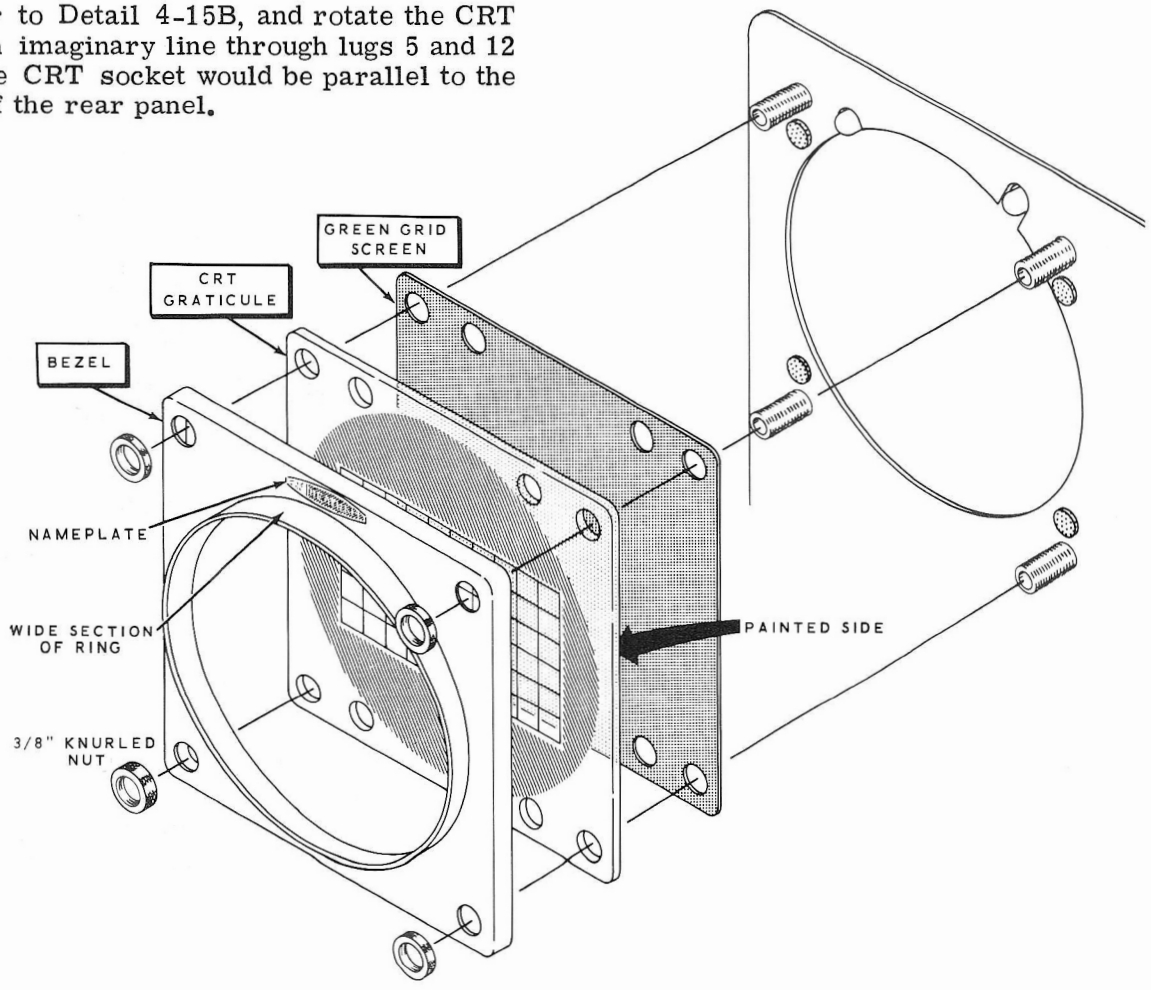

Detail 4-15C

( ) Locate the nameplate and carefully peel off the protective backing. Position the nameplate on the bezel as shown, then press it into place.

REAR PANEL SHORTING LINK MOUNTING

Refer to Pictorial 4-16 for the following steps.

( ) Install the shorting link on the binding post bases on the rear panel. Use a red binding post cap on the top binding post base, and a black binding post cap on the bottom binding post base.

( ) Install a small rubber foot on the two spacers extending from the rear panel. Use 8-32 x 3/8" screws.

NOTE: The blue and white identification label shows the Model number and Production Series number of your kit. Refer to these numbers in any communications with the Heath Company; this assures you that you will receive the most complete and up-to-date information in return.

( ) Select a location on the chassis, just inside the rear panel, for the identification label. Then carefully peel away the backing paper and press the label into position.

This completes the Step-By-Step Assembly of the kit. Check to see that no short circuits exist and that all connections are soldered. Remove any wire clippings or solder splashes.

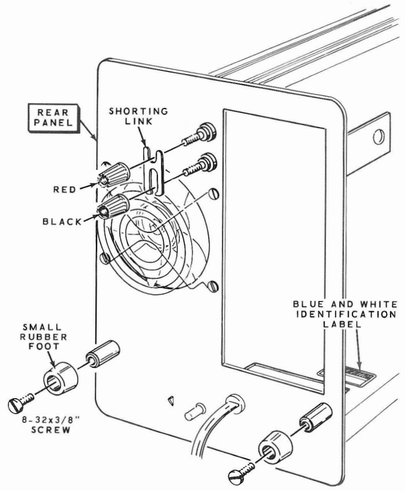

PICTORIAL 4-16

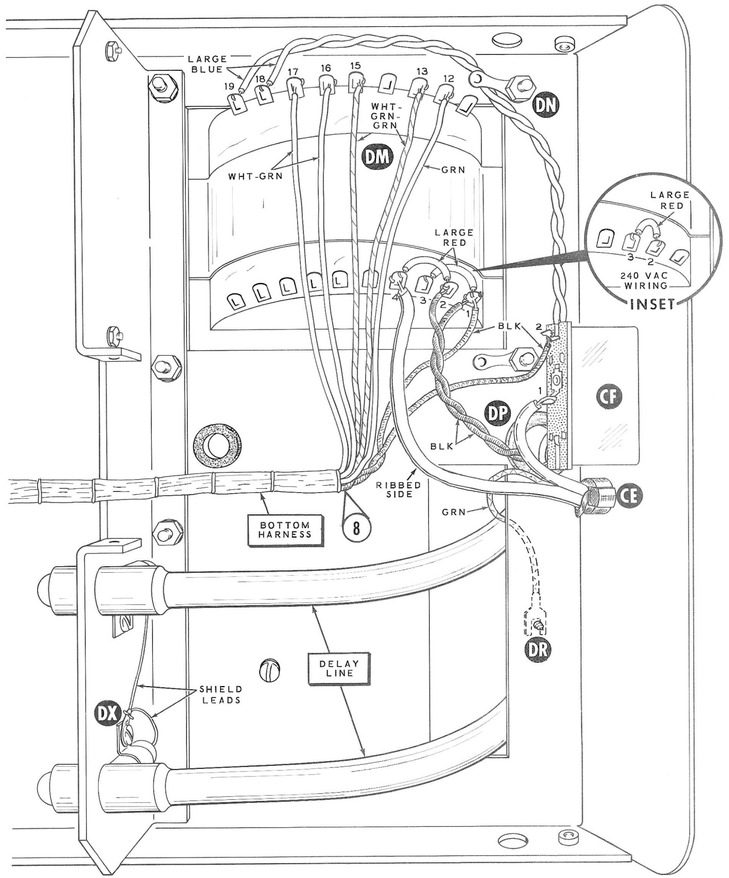

PICTORIAL 4-10

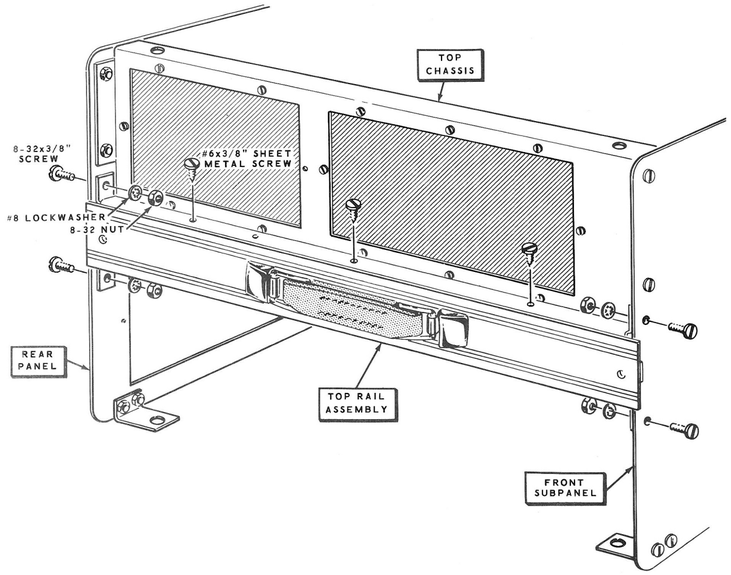

PICTORIAL 4-11

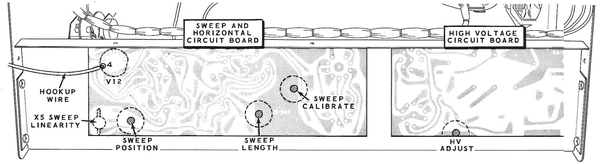

FIGURE 1-1

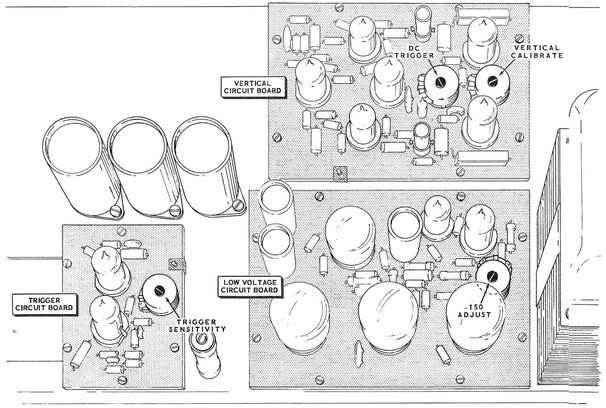

FIGURE 1-2

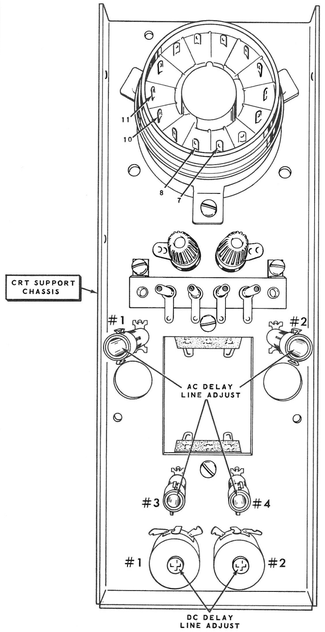

FIGURE 1-3

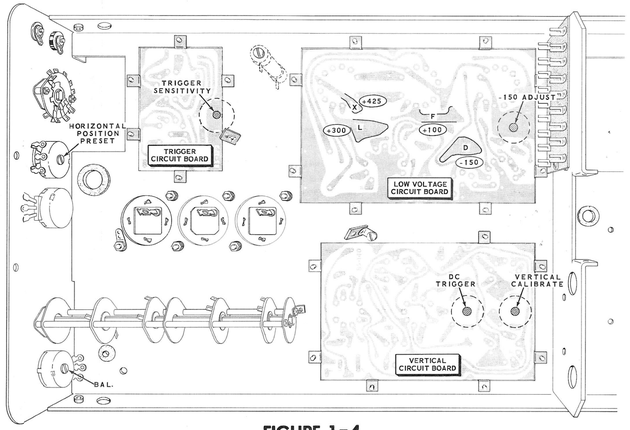

FIGURE 1-4

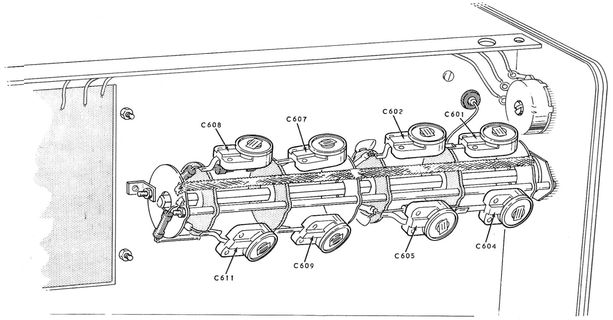

FIGURE 1-5

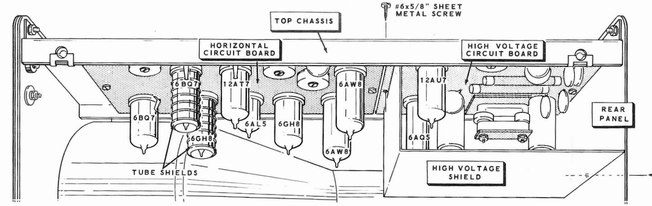

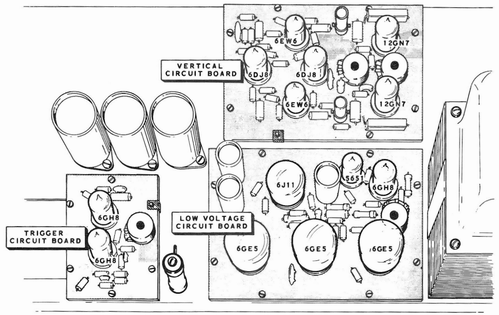

PICTORIAL 4-17

INITIAL TESTS

Refer to Pictorial 4-17 for the following three steps.

( ) Install the tubes in their respective sockets on the circuit boards.

( ) Install tube shields at locations V7 and V9 on the horizontal circuit board.

( ) Install the high voltage shield, using #6 x 5/8" sheet metal screws. Be careful not to pinch any wires between the shield and the rear panel or top chassis.

( ) Prepare both ends of a 16" length of hookup wire (any color). Solder one end of this wire to pin 4 of tube socket V12 on the foil side of the horizontal circuit board (see Figure 1-1 fold-out from Page 84). Connect the other end to the red HOR DISPLAY EXT terminal on the panel.

FRONT PANEL CONTROL SETTINGS

NOTE: In the following steps, all front panel controls will be called out in capital letters just as they appear on the front of the Oscilloscope. The following markings are on the front panel in abbreviated form:

MARKING	FULL MEANING
ASTIG	Astigmatism
SCALE ILLUM	Scale Illumination
VERTICAL AMP	Vertical Amplifier
VOLTS/CM	Volts Per Centimeter
BAL	Balance
HOR DISPLAY	Horizontal Display
INT	Internal
EXT	External
MAG ON	Magnifier On
VAR	Variable
UNCAL	Uncalibrated
TIME/CM	Time Per Centimeter
AUTO	Automatic
NORM	Normal

Set the front panel controls as directed in the following groups of steps.

BEAM AND SCALE CONTROLS

( ) INTENSITY: Center of range.

( ) FOCUS: Center of range.

( ) ASTIG: Center of range.

( ) SCALE ILLUM: Fully counterclockwise (AC OFF).

VERTICAL AMP

( ) GAIN: Fully clockwise (CAL).

( ) AC-DC switch: AC.

( ) VOLTS/CM: 2.

( ) BAL: Center of range (screwdriver adjust).

POSITIONING

( ) VERTICAL: Center of range.

( ) HORIZONTAL: Center of range.

TIME BASE

( ) TRIGGER SOURCE: INT.

( ) TRIGGER MODE switches: +, AC, NORM.

( ) TRIGGER LEVEL: Center of range.

( ) STABILITY: Fully counterclockwise.

( ) TIME/CM: 10 M SEC.

( ) MULTIPLIER: 1.

( ) VARIABLE: Any position.

( ) HOR DISPLAY: EXT.

( ) EXT LEVEL: Fully counterclockwise.

INTERNAL CONTROL SETTINGS

In the following steps the internal controls will be preset. These controls should be set when looking at the Oscilloscope from the top or rear:

Refer to Figures 1-1 through 1-4 (fold-out from Page 84) for the following steps.

TOP CHASSIS

( ) Sweep Position: Center of range.

( ) Sweep Length: Fully clockwise.

( ) Sweep Calibrate: Center of range.

( ) High Voltage Adjust: Fully counterclockwise.

BOTTOM CHASSIS

( ) Trigger Sensitivity: Center of range.

( ) -150 Adjust: Fully clockwise.

( ) DC Trigger: Center of range.

( ) Vertical Calibrate: Center of range.

CRT SUPPORT CHASSIS

( ) Both DC Delay Adjust: Center of range.

INSIDE FRONT PANEL

( ) Position the oscilloscope on its left side as viewed from the front.

( ) Horizontal Position Preset: Center of range.

WARNING: Very high voltage (2500 volts) is present on the foil side of the high voltage circuit board and at the anode clip of the CRT (cathode ray tube). Extreme care should be taken to make sure you do not touch any of these areas while the Oscilloscope is in operation. If it is necessary to do any work in the Oscilloscope after it has been on, first make sure it is turned off. Then short the post accelerator lead (the yellow wire on the high voltage circuit board) to the chassis to discharge the high voltage.

ADJUSTMENTS

If the Oscilloscope operates abnormally at any time during these Adjustments, turn it off immediately and refer to In Case Of Difficulty on Page 111. If the circuit breaker trips, turn the Oscilloscope off, and wait at least 30 seconds before resetting it.

Refer to Figure 1-4 for the following test points.

NOTE: The meter used for the following adjustments should be a VTVM or volt/ohmmeter that is accurate within 2%.

( ) Set the meter to measure -150 volts DC, and connect it between the chassis (ground) and foil D (white wires) of the low voltage circuit board.

NOTE: Until adjustments and voltage checks in the following six steps are completed, some undesirable circuit unbalance may exist. Read these six steps all the way through before turning on the Oscilloscope. Then complete the adjustments and voltage checks quickly (within 4 or 5 minutes).

( ) 1. Plug in the line cord (use the adapter plug if necessary) and turn on the Oscilloscope with the SCALE ILLUM knob. NOTE: The meter may tend to go positive for a few seconds until the Oscilloscope warms up.

( ) 2. As soon as the voltage at foil D has stabilized, adjust the -150 Adjust control for exactly -150 volts at foil D.

( ) 3. Reset the meter so it will measure the following positive DC voltages. Check to see that these voltages appear at the indicated foils on the low voltage circuit board.

Foil F = +100 (brown wires)
Foil L = +300 (orange wires)
Foil X = approximately +450 (violet wires)

Refer to Figures 1-1 through 1-4 for the following steps.

( ) 4. Set the meter so it will measure +300 volts.

NOTE: In each of the next two steps, as the indicated control is rotated in one direction, the voltage at one pin of the CRT socket will increase while the voltage on the other (measured) pin decreases.

( ) 5. Alternately measure the voltage from the chassis to pins 7 and 8 of the CRT socket. Adjust the BAL control (on the front panel) until there is less than 10 volts difference between the voltages on these two pins.

NOTE: In the following step, if proper balance cannot be obtained reset the control to the center of its range. Then refer to the In Case Of Difficulty section (Page 111) of the Manual.

( ) 6. In a like manner, alternately measure the voltages between the chassis and pins 10 and 11 of the CRT socket. Adjust the Horizontal Position Preset control (behind the front panel) until there is less than 10 volts difference between the voltages on these two pins.

( ) Slowly rotate the HV Adjust control (on the high voltage circuit board) until a spot just appears on the CRT. If the spot can not be seen on the CRT, repeat the previous two steps.

( ) Adjust the FOCUS and ASTIG controls for a sharp-round spot. Now, turn down the INTENSITY control. The spot should go out. If the spot does not go out, the HV Adjust control is set too high. Reset the HV Adjust control to obtain the proper action.

( ) Return the INTENSITY control to its mid-position. The spot should reappear.

( ) With the HORIZONTAL POSITIONING control set at its 12 o'clock position, reset the Horizontal Position Preset control so the spot appears exactly on the center vertical line of the graticule.

( ) Turn the EXT LEVEL control. A horizontal line should appear on the CRT. If there is a spot but no line, the horizontal deflection circuits are not operating properly.

( ) Disconnect the hookup wire, from the HOR DISPLAY EXT terminal, and connect it to the center contact of the VERTICAL AMP INPUT terminal. A vertical line should appear on the CRT. If there is a spot but no line, the vertical deflection circuits are not operating properly.

( ) Turn the Oscilloscope off and completely remove the hookup wire connected to pin 4 of tube socket V12.

( ) Turn the Oscilloscope on and set the HOR DISPLAY switch to X1.

( ) Now turn up the STABILITY control. A horizontal line should reappear on the CRT. NOTE: It may be necessary to readjust the setting of the INTENSITY control. If there is a spot, but no line, the sweep circuits are not operating properly or the Sweep Length control may not be in its full clockwise position.

( ) Check to make sure the horizontal line is parallel to the horizontal lines on the CRT graticule. If these two lines are parallel go on to the next step; but if they are not parallel, realign the CRT as follows:

1. Remove the CRT bezel, green grid screen, and graticule.

2. Make a mark with a grease pencil directly over the horizontal trace on the face of the CRT.

3. Turn the Oscilloscope off and replace the graticule.

4. Loosen the CRT clamp, and rotate the CRT until the grease pencil mark is parallel to the horizontal lines on the graticule.

5. Tighten the CRT clamp, and remove the graticule.

6. Remove the grease pencil line from the CRT.

7. Replace the graticule, green grid screen, and bezel.

( ) Turn on the Oscilloscope and allow it to warm up for about five minutes.

( ) Adjust the Sweep Position control (on the horizontal circuit board) so the left starting point of the horizontal line is aligned with the extreme left vertical line of the graticule.

NOTE: The long vertical and horizontal lines on the graticule are spaced 1 cm (centimeter) apart. The short lines on the center vertical and horizontal lines are 2 mm (millimeters) apart. The usable graticule area is 6 cm high and 10 cm wide.

( ) Adjust the Sweep Length control (on the horizontal circuit board) so the right end of the horizontal line extends about 1/2 or 1 cm beyond the extreme right vertical line of the graticule. Check this sweep length by rotating HORIZONTAL POSITIONING control.

( ) Place the HOR DISPLAY switch in the EXT position. A spot should appear on the CRT.

( ) Check the effect of the HORIZONTAL and VERTICAL POSITIONING controls. The horizontal and vertical movement will be limited until calibration is complete.

( ) Return the HOR DISPLAY to its X1 position.

( ) Turn the STABILITY control fully counterclockwise, and reduce the setting of the INTENSITY control until the spot just goes out. Now turn the STABILITY control clockwise. A trace of normal intensity should appear on the CRT.

( ) Try all possible combinations of the TIME/CM and MULTIPLIER switches to be sure the sweep operates in all positions. Do not worry about changes in trace length at this time.

( ) Place the HOR DISPLAY switch in the X5 position. The trace should extend beyond the graticule on both sides. Rotate the HORIZONTAL POSITIONING control from one extreme to the other to confirm this.

IMPORTANT: The -150 volts will be recalibrated in the next two steps. Since this voltage is a reference for most other voltages in the Oscilloscope, it must remain accurately at -150 volts throughout the following calibration adjustments. If wide line voltage variations exist in your area, it would be best if a line voltage regulator, set at the nominal line voltage, were used during the calibration procedure.

After this calibration is complete, if the -150 Adjust control has to be readjusted due to tube or component changes, the entire Calibration procedure must be repeated. However, once the Calibration adjustments are completed, variations in line voltage will have little if any effect on the operation and accuracy of the Oscilloscope. This is due to the stability of the voltage regulator circuits used in the Oscilloscope.

( ) Set the meter to measure -150 volts DC, and connect it between foil D (white wires) of the low voltage circuit board and chassis ground.

( ) Reset the -150 Adjust control (if necessary) to obtain a -150 V DC between foil D on the low voltage circuit board and the chassis. Then disconnect the meter.

This completes the Initial Tests. Proceed to the Calibration section of the Manual for the final adjustments.

CALIBRATION

The final accuracy of the Oscilloscope will depend almost entirely on the accuracy of the generator used during the calibration procedure. The generator, or generators, must be accurate in frequency and output levels. It should be capable of producing 1 kc and 100 kc sine waves, and 1 kc to 100 kc square waves that have a fast rise time with a minimum of tilt and overshoot.

If highly accurate generators are not available, a generator of average accuracy and a calibrated oscilloscope can be used in a less accurate comparison type of calibration. To use this method, obtain the recommended waveform on the calibrated oscilloscope, then observe your Oscilloscope and adjust it for the same waveshape.

Refer to Figures 1-1 through 1-4 (fold-out from Page 84) for control locations.

TRIGGER CIRCUITS

CONTROL SETTINGS

Vertical Amp

GAIN: CAL.
VOLT/CM: .05.

Time Base

TRIGGER SOURCE: INT.
TRIGGER MODE: +, AC, NORM.
TRIGGER LEVEL: Center of range.
STABILITY: Fully counterclockwise.
TIME/CM: 100 μ SEC.
MULTIPLIER: 1.
VARIABLE: Any position.
HOR DISPLAY: X1.
EXT LEVEL: Any position.

( ) Turn the Oscilloscope and generator, or generators, on and permit them to warm up.

ADJUSTMENTS

( ) Connect the generator to the VERTICAL AMP INPUT.

( ) Set the generator for a 1 kc sine wave.

( ) Turn the STABILITY control clockwise until a pattern appears on the CRT.

( ) Set the generator output so the pattern is 6 cm high. Adjust the VOLT/CM switch, VERTICAL POSITIONING control, and the generator output as required.

( ) Turn the STABILITY control counterclockwise until the pattern just disappears.

( ) Adjust the Trigger Sensitivity control (on the trigger circuit board) until one complete sine wave is "locked-in" on the CRT. The starting point of the trace may be at any location on the left-hand vertical line of the graticule.

( ) While moving the TRIGGER MODE switch between (+) and (-), adjust the Trigger Sensitivity control until the starting point of the trace, at the left side of the CRT, is at the same location for both switch positions. Return the TRIGGER MODE switch to (+).

( ) Adjust the TRIGGER LEVEL control until the starting point is on the center horizontal line of the graticule. See Figure 2-1.

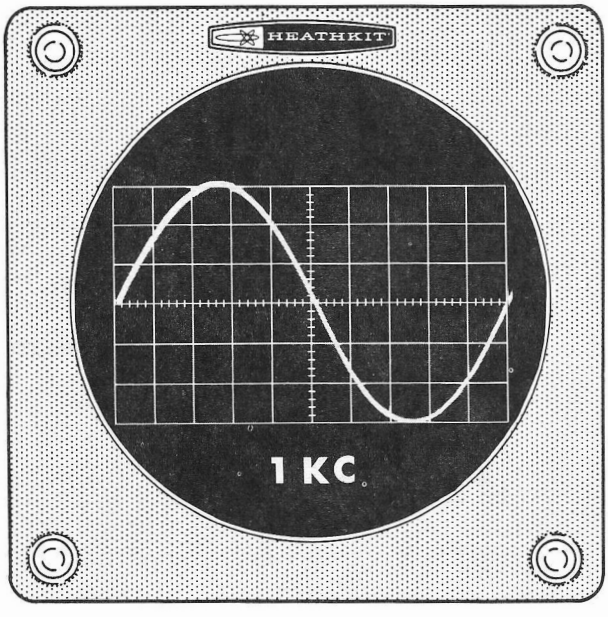

Figure 2-1

( ) The TRIGGER LEVEL control should now be in the 12 o'clock position. If it is not, loosen the setscrew, reposition its pointer to the 12 o'clock position. Then retighten the setscrew.

( ) Reduce the output level of the generator to obtain a trace 1 cm high (1/2 square above and 1/2 square below the horizontal center line). The TRIGGER LEVEL control may have to be readjusted to obtain a stable trace.

( ) Switch the TRIGGER MODE switch between its (+) and (-) positions; the starting point of the trace should remain at the same location. If a trace does not appear on either the (+) or (-) position, increase the output of the generator until a trace does appear at both positions. Then readjust the Trigger Sensitivity control as before. If this control is adjusted properly, you should be able to maintain a stable trace on the (+) or (-) positions of the MODE SWITCH for any trace between 1 cm and 6 cm high.

This completes the setting of the Trigger Sensitivity control.

NOTE: After an internal control has been adjusted, it might be wise to mark it with a grease pencil or place a piece of tape on it so it will not be changed accidentally later on.

( ) Set the generator output to obtain a trace 6 cm high.

( ) Make sure the TRIGGER MODE switches are in the (+), DC, and NORM position. Do not be concerned if the trace disappears.

( ) While moving the TRIGGER MODE switch between DC and AC, adjust the DC Trigger control (on the vertical circuit board) until the starting point is at the same location on the CRT for both positions of the switch. Return the TRIGGER MODE switch to AC.

( ) Disconnect the generator from the VERTICAL AMP INPUT. The trace will disappear, unless the STABILITY control is set too high. If so, reduce the setting of this control until the trace just disappears.

( ) Change the TRIGGER MODE switch from NORM to AUTO. A straight horizontal line should appear.

( ) Reconnect the generator to the VERTICAL AMP INPUT. The pattern should now reappear on the CRT.

( ) Move the TRIGGER MODE switch between (+) and (-), this should reverse the phase of the sine wave. The starting point of the trace may vary slightly, but this is normal. NOTE: The TRIGGER MODE AC DC switch and the TRIGGER LEVEL control are disabled when the TRIGGER MODE switch is in the AUTO position.

This completes the adjustments of the trigger circuits.

TIME BASE CIRCUITS

TIME BASE CONTROL SETTINGS

TIME/CM: 100 μ SEC.
MULTIPLIER : 2.

ADJUSTMENTS

Connect the generator to the VERTICAL AMP INPUT and set it for a 1 kc square wave output (a pulse output can also be used) to produce a trace approximately 4 cm high.

NOTE: If at any time the trace does not completely fill the width of the graticule, increase the setting of the Sweep Length control for a trace width that extends 1/2 to 1 cm beyond the right edge of the graticule. Also, adjust the HORIZONTAL POSITIONING control, as required, to keep the starting point of the trace on the left-hand vertical line of the graticule.

( ) Adjust the Sweep Calibrate control (on the horizontal circuit board) so two complete waveforms just fill the width of the graticule (10 cm). See Figure 2-2. This adjustment must be made accurately. Do not be concerned that the trace continues past the right side of the graticule.

This adjustment has calibrated the .1 SEC through the 100 μ SEC positions of the TIME/CM switch, and the 1 through 5 positions of the MULTIPLIER switch. The 10 and 1 μ SEC positions of the TIME/CM switch will be calibrated later.

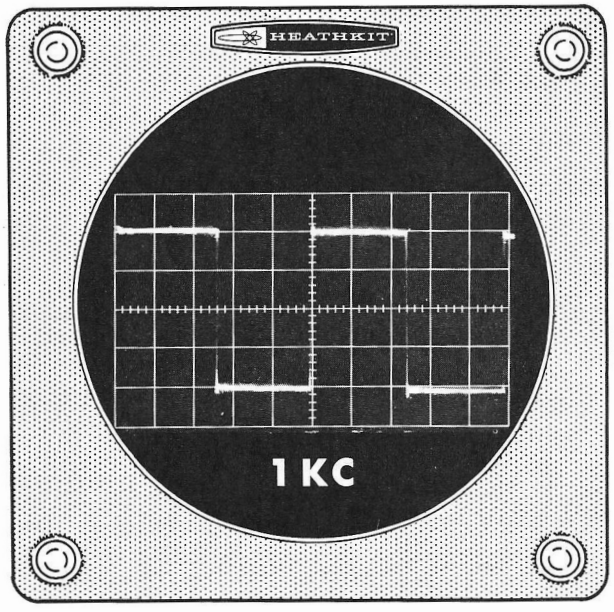

Figure 2-2

SWEEP LINEARITY CIRCUITS

TIME BASE CONTROL SETTINGS

TIME/CM: 10 μ SEC.
MULTIPLIER: 2.
DISPLAY: X5.

ADJUSTMENTS

Set the generator for a 100 kc sine wave at a level which will produce a trace 4 cm high. Turn the HORIZONTAL POSITIONING control clockwise so the start of the trace is near the left side of the graticule.

( ) Adjust the X5 Sweep Linearity trimmer (on the horizontal circuit board) so the first cycle of the waveform is equal in width and appearance to the remaining cycles. This adjustment affects only the first cycles of the waveform.

( ) Change the TIME/CM switch to 1 μ SEC, the HOR DISPLAY switch to X1, and the MULTIPLIER switch to 5.

( ) Adjust the X1 Sweep Linearity trimmer on the DISPLAY switch (see the chassis photo on Page 136) so the first half of the waveform is equal in width and appearance to the second half of the waveform.

( ) Adjust the generator for a 100 kc square wave at a level which will produce a trace 4 cm high.

( ) Change the MULTIPLIER switch to 2.

( ) Adjust trimmer C635 on the TIME/CM switch (see the Chassis Photo on Page 136) so two complete waveforms just fill the width of the graticule (10 cm). (Each of the two square waves should be exactly 5 cm wide.) See Figure 2-3. This adjustment must be made accurately. Do not be concerned that the trace continues past the right side of the graticule.

This adjustment has calibrated the 10 μ SEC and 1 μ SEC positions of the TIME/CM switch.

( ) Now check all possible positions of the TIME/CM and MULTIPLIER switches to see that the trace continues past the right side of the graticule. If it does not, increase the setting of the Sweep Length control for a trace 10-1/2 to 11 cm long. This is to make sure that the trace always fills the complete width of the graticule.

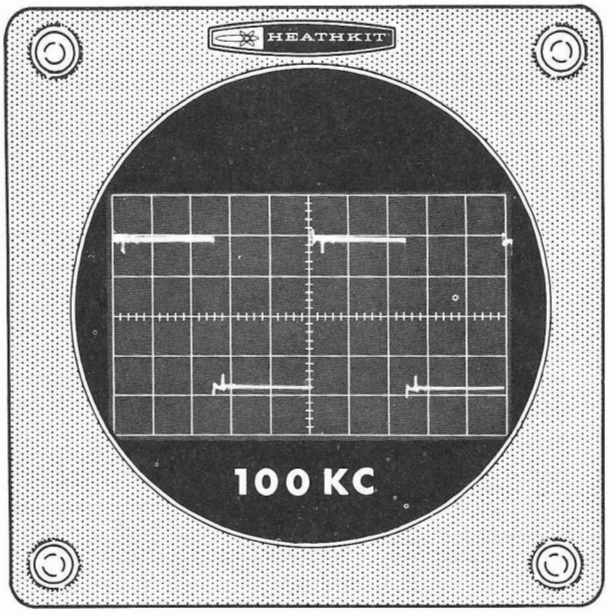

Figure 2-3

This completes the adjustments of the TIME BASE circuits.

VERTICAL AMPLIFIER CIRCUITS

VERTICAL AMPLIFIER AMPLITUDE CALIBRATION

( ) Make sure that the VOLT/CM switch is in the .05 position.

( ) Set the generator for a calibrated .05 volt (50 mv) peak-to-peak output at any frequency between 10 cps and 100 kc.

( ) Adjust the Vertical Calibrate control (on the vertical circuit board) until the trace is exactly 1 cm high.

NOTE: If an accurate generator is not available, the following alternate method, which uses a fresh 1.5 volt battery, may be used:

( ) Set the VOLTS/CM switch to .5 and the VERTICAL AMP switch to DC.

( ) Adjust the Vertical Calibrate control (on the vertical circuit board) so the horizontal line moves exactly 3 cm, when the battery is alternately connected and disconnected at the VERTICAL AMP INPUT.

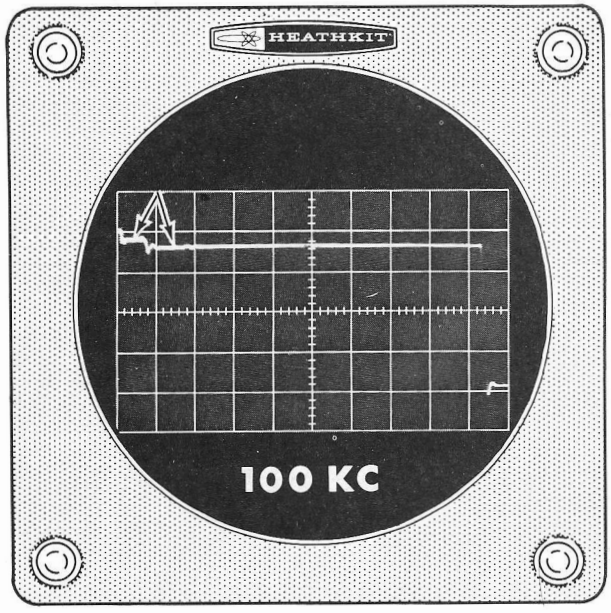

Figure 2-4

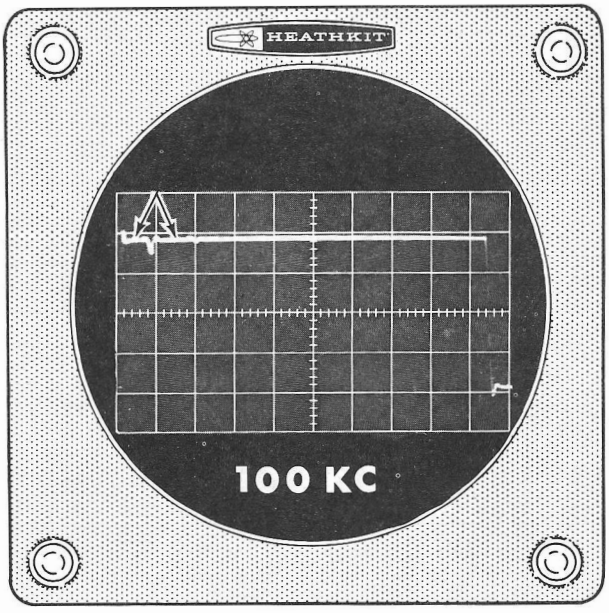

Figure 2-5

DC DELAY LINE TERMINATION

The following adjustments are used to make the horizontal portion of a square wave as flat as possible. Figure 2-4 shows how this part of the waveform appears when the DC Delay Line Adjust controls are not set properly. Note that the start of the horizontal line is not lined up properly with the remaining portion of this line.

The DC Delay Line Adjust controls must be adjusted equally and in small amounts, but in opposite directions. If only one control is adjusted to make this correction, the delay lines will not be balanced properly. When turning control #1 clockwise (from the rear) the leading portion of the line will be moved downward. The action of control #2 will have the opposite effect.

NOTE: It may be helpful to view the trace in a mirror when making the DC and AC delay line adjustments, as these adjustments are made from the rear of the Oscilloscope.

With the VOLTS/CM switch in the .05 position, set the generator for a 50 kc to 100 kc square wave.

( ) Make the necessary adjustments of the DC Delay Line Adjust controls. Remember, turn the controls only a very small amount at a time, and in opposite directions to each other.

When the leading portion of the horizontal line is lined up with the remainder of the line (see Figure 2-5), check the opposite sides of these controls to see that the screwdriver slots are positioned approximately the same amount, but in opposite directions from the 12 o'clock position.

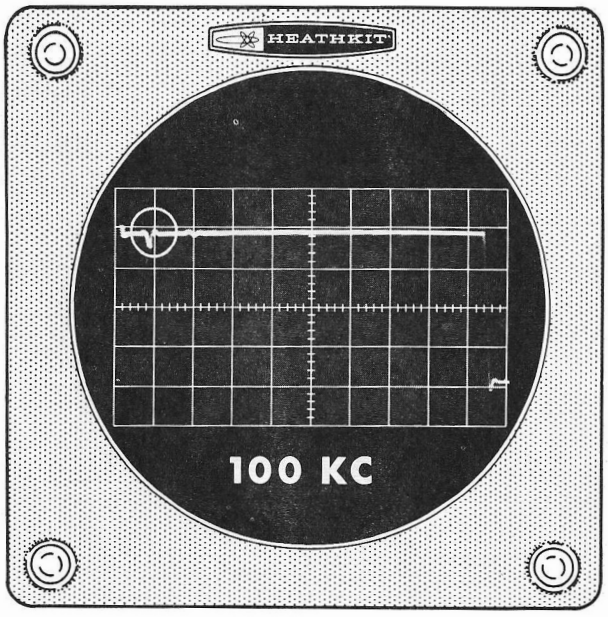

Figure 2-6

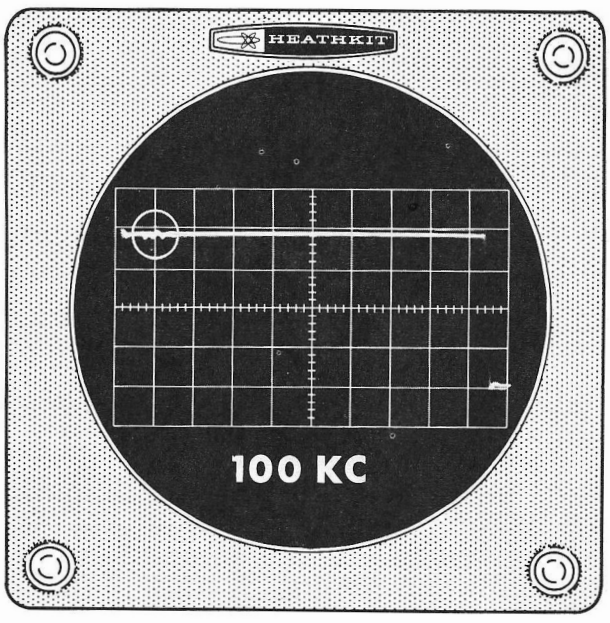

Figure 2-7

AC DELAY LINE TERMINATION

These adjustments are performed to remove as much wrinkle as possible (see Figure 2-6) from the first 1/2 μ sec of the horizontal line of a square wave. All the wrinkle cannot be removed, as seen in Figure 2-7, which shows the waveform after proper adjustment of the four AC Delay Line Adjust coils.

Although any one of these four coils can be adjusted to remove most of the wrinkle, each coil must be adjusted only a little at a time, and all four coils must be adjusted as a group.

( ) Set the generator to produce a 50 kc to 100 kc square wave.

( ) Adjust coil #1 until you see the first noticeable decrease in the height of the wrinkle, then stop. Use the alignment tool supplied.

( ) Then, adjust coil #3 until there is a slight reduction in height of this wrinkle, then stop.

( ) Coils #2 and #4 should now be adjusted in a like manner.

( ) Continue adjusting all four coils until no further improvement can be noticed. Adjust coils #1 and #3 as a pair, and coils #2 and #4 as a pair. Also, the slug in coil #1 and the slug in coil #2 should be kept as close as possible to the same depth into the coil form. The same is true of coils #3 and #4.

INPUT ATTENUATOR

VERTICAL AMP CONTROL SETTINGS

GAIN: Calibrate.
VOLTS/CM: .05.

ADJUSTMENTS

( ) Position the Oscilloscope on its right side (as viewed from the front).

( ) Set the generator to produce a 1 kc square wave that is 1 cm to 4 cm high. This should be a good square wave having a minimum of tilt and overshoot.

NOTE: Readjust the generator when necessary, to maintain approximately the same trace height throughout the following adjustments. The purpose of these adjustments is to obtain the proper

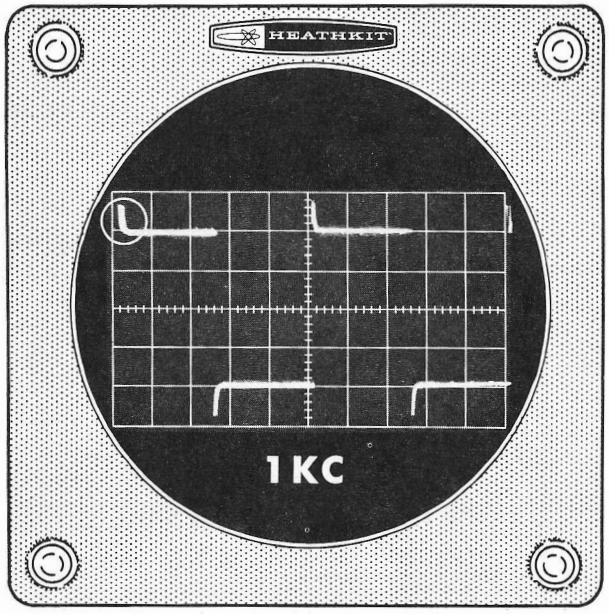

Figure 2-8

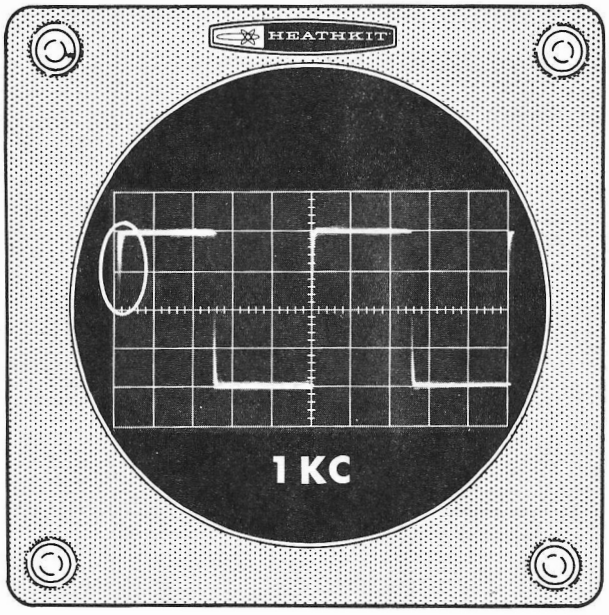

Figure 2-9

amounts of circuit capacitance for each position of the VOLTS/CM switch. Figures 2-8 through 2-10 show the conditions of too much capacitance, too little capacitance, and the correct amount of capacitance respectively.

Observe the waveform now on the CRT. Perform the steps in the following chart and adjust the indicated trimmers to obtain the correct waveshape.

VOLTS/CM SWITCH	TRIMMER
( ) .1	C608
( ) .2	C611
( ) .5	C602
( ) 1	C607
( ) 2	C609
( ) 5	C605

The 10 and 20 positions of the VOLTS/CM switch should show the same waveshape. There are no separate adjustments for these positions of the switch.

Trimmers C601 and C604 are adjusted only when a low capacitance probe is used with the Oscilloscope. For these adjustments see Low Capacitance Probe adjustments on Page 98.

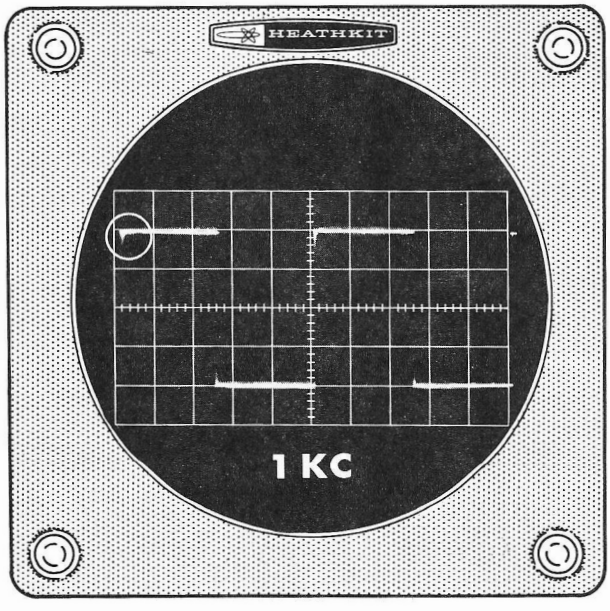

Figure 2-10

FINAL ADJUSTMENTS

VERTICAL AMPLIFIER BALANCE

( ) Increase the setting of the STABILITY control to obtain a horizontal line with no vertical input.

( ) Set the VERTICAL AMP BAL control so that the trace stays stationary (does not move up or down) when operating the VERTICAL AMP GAIN control through its entire range.

DC TRIGGER

( ) Connect a 1 kc sine wave signal to the VERTICAL AMP INPUT.

( ) Set the TRIGGER MODE switches to NORM, AC, and (+). Adjust for a stable trace.

( ) Center the trace on the graticule with the VERTICAL POSITIONING control.

( ) If necessary, set the DC Trigger Adjust control so the trace does not disappear when switching the TRIGGER MODE switch between AC and DC.

HIGH VOLTAGE

( ) Turn the INTENSITY control fully counterclockwise.

( ) Adjust the HV Adjust control until the trace just disappears.

This completes the adjustments of the Oscilloscope, unless a low capacitance probe is to be used. If a low capacitance probe is to be used, perform the following adjustments also.

LOW CAPACITANCE (X10) PROBE

( ) Set the Oscilloscope and generator the same way they were set for the Input Attenuator adjustments on Page 96.

( ) Connect the generator to the VERTICAL AMP INPUT, and observe the waveform.

( ) Connect the low capacitance probe between the VERTICAL AMP INPUT and the generator. Remember that the trace height will be reduced by a factor of 10.

( ) Set the probe adjustment for the same pattern that appeared on the Oscilloscope in the preceding step. Do not readjust the probe in the following steps.

( ) Change the VOLTS/CM switch to the .5 position.

( ) Adjust trimmer C601 (on the VOLTS/CM switch) for the proper waveshape.

( ) Set the VOLTS/CM switch to the 5 position.

( ) Adjust trimmer C604 (on the VOLTS/CM switch) for the proper waveshape.

This completes the adjustments for the use of a low capacitance probe.

FINAL ASSEMBLY

( ) Refer to Detail 5-1A, and mount the eight 1/4-turn fasteners on the chassis assembly. Position the fasteners as shown.

NOTE: The spacers extending from the rear panel make a convenient storage place for the line cord.

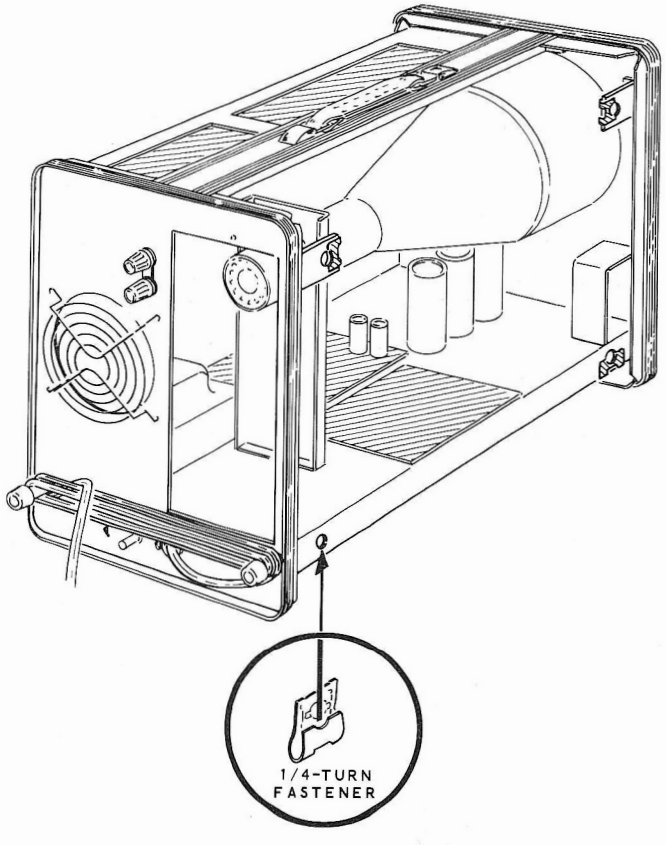

Detail 5-1A

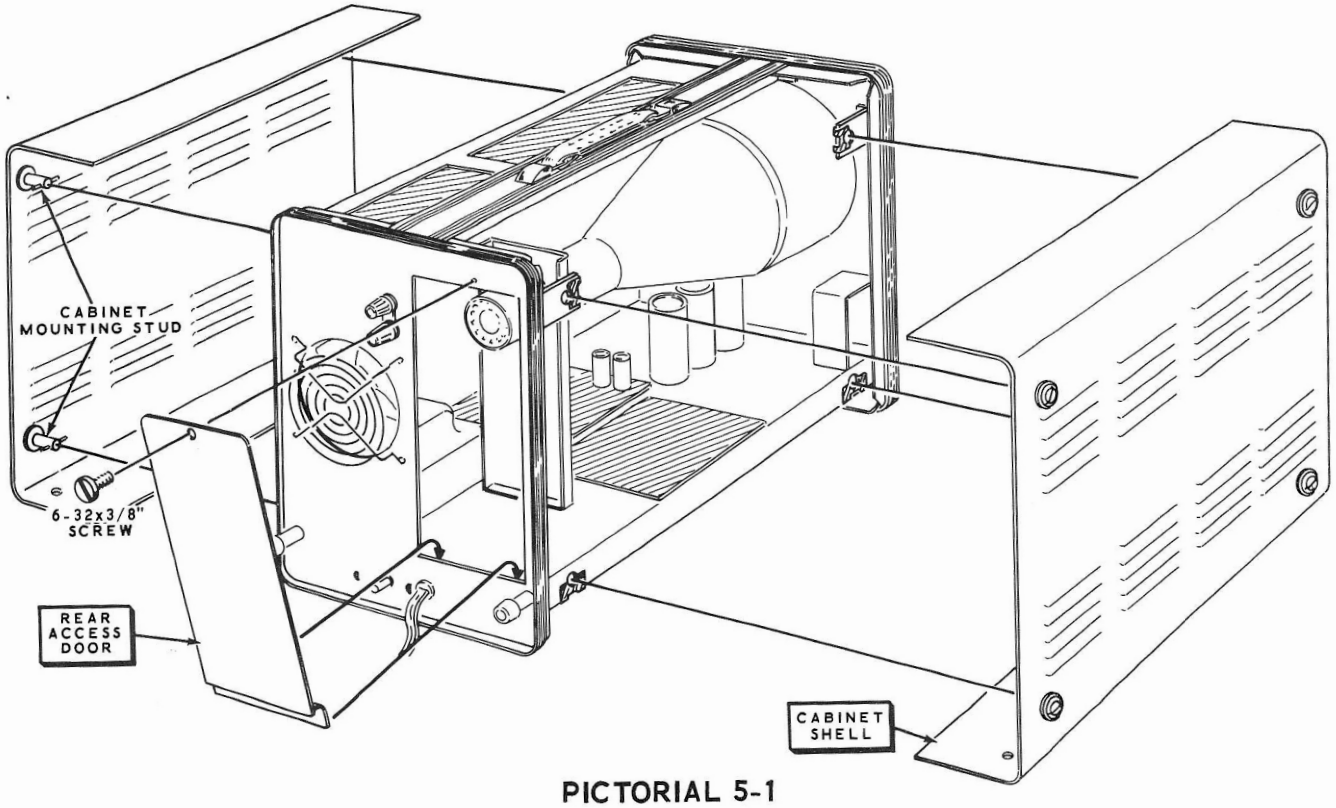

PICTORIAL 5-1

Refer to Pictorial 5-1 for the following steps.

( ) Refer to Detail 5-1B, and install four cabinet mounting studs at the indicated locations on each of the cabinet shells. Use 1/4" nylon flat washers, 5/32" ID flat washers, and cabinet mounting studs pins. These pins can be squeezed into the studs with a pair of pliers. Be sure the pins extend equal amounts from each side of the studs.

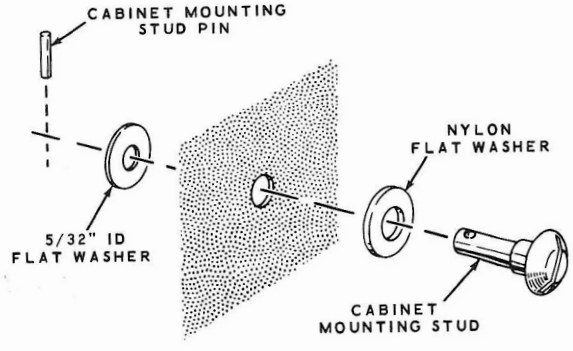

Detail 5-1B

( ) Refer to Detail 5-1C, and install two large rubber feet on each cabinet shell. Use 8-32 x 3/8" hardware.

( ) Install a cabinet shell on each side of the chassis assembly with its top and bottom edges into the grooves of the top and bottom rail assemblies. Then turn each cabinet mounting stud 1/4 turn.

( ) Install the rear access door with a 6-32 x 3/8" screw.

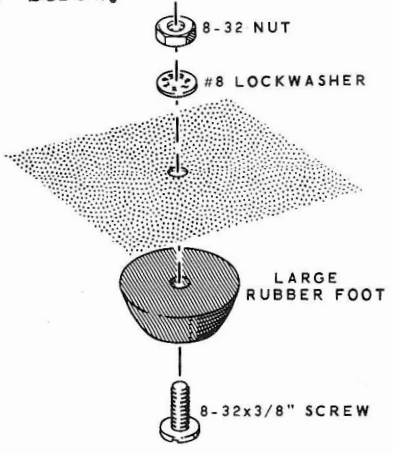

Detail 5-1C

TEST CABLE ASSEMBLY

Refer to Pictorial 5-2 for the following steps.

( ) Refer to Detail 5-2A, and prepare one end of the large coaxial cable as shown.

( ) Solder alligator clips on the inner lead and shield at the prepared end of the cable.

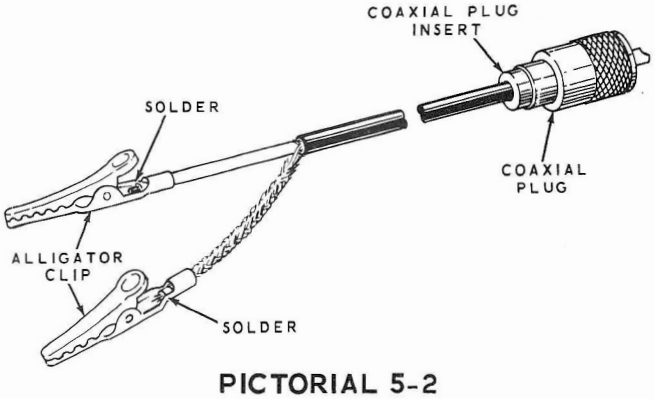

PICTORIAL 5-2

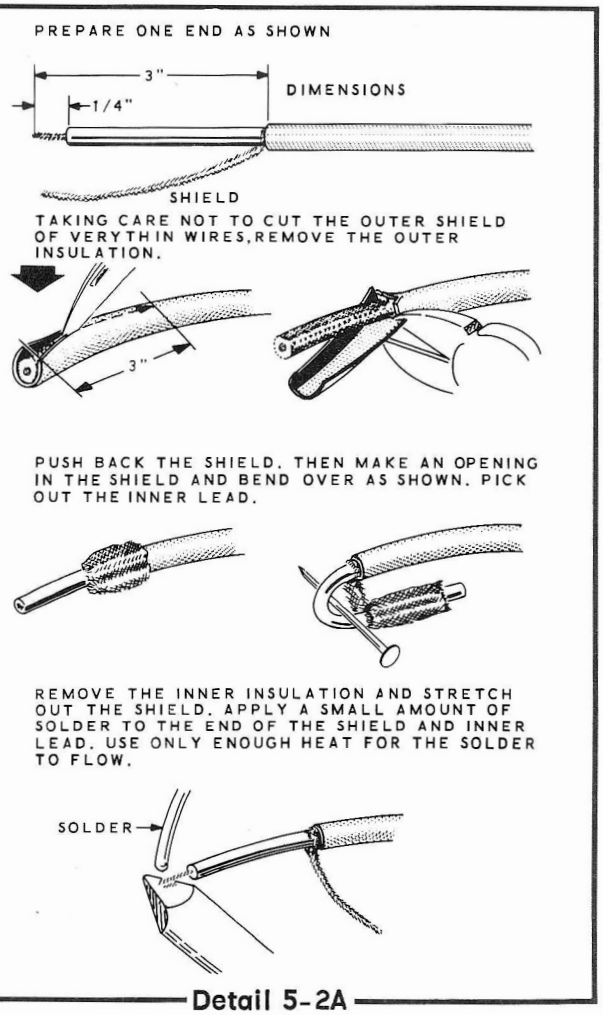

Detail 5-2A

( ) Refer to Detail 5-2B. Prepare the other end of the large coaxial cable and install the coaxial plug as shown.

This completes the calibration and assembly of the Oscilloscope.

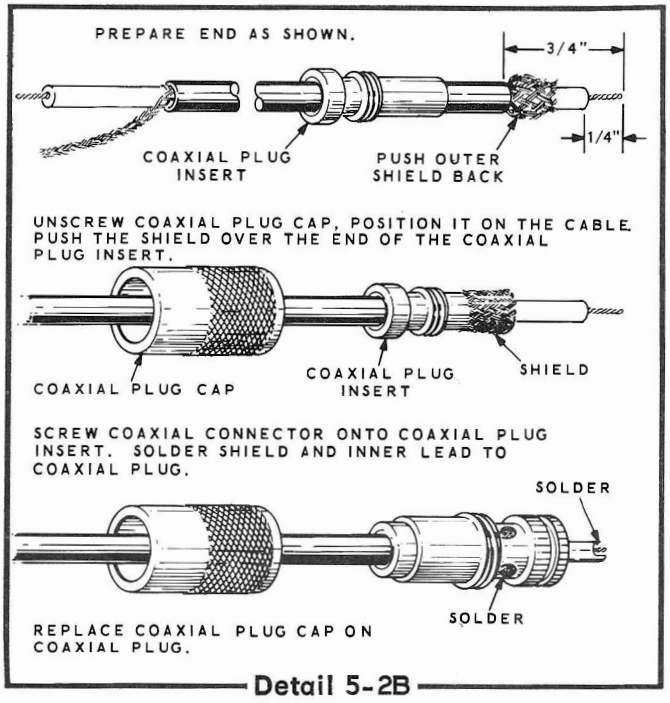

Detail 5-2B

CONTROL FUNCTIONS AND OPERATION

The switches and controls on the front panel of the Model IO-14 Oscilloscope are grouped and color coded for ease of operation.

The paragraph numbers in this section refer to the circled numbers on Figure 3-1 (fold-out from Page 109).

BEAM AND SCALE CONTROLS

1. SCALE ILLUM. When fully counterclockwise, the switch on this control is in the AC power Off position. As the control is rotated clockwise, the AC power is switched on, and the brightness of the edge-lighted graticule can be adjusted to the desired brilliance.

NOTE: The green grid screen may be removed if you wish. It is not essential to the operation of the Oscilloscope.

2. ASTIG. This control adjusts the shape of the spot on the face of the CRT. It is used in conjunction with the FOCUS control to obtain the sharpest, clearest display on the CRT.

3. FOCUS. This control varies the size of the spot on the face of the CRT. The FOCUS control is adjusted with the ASTIG control for the sharpest display.

4. INTENSITY. The brightness of the trace is increased with clockwise rotation of the Intensity Control. A slight readjustment of the ASTIG and FOCUS controls is sometimes required after adjusting the Intensity.

5. Power On Indicator. The red neon lamp glows when the AC power is turned on. Since this lamp operates from a B+ voltage, it may not go out immediately when the power is turned off.

VERTICAL AMP SECTION

6. INPUT terminals. The coaxial socket will accept a standard coaxial connector, or a banana plug may be inserted in the center contact and a separate ground lead connected to the black binding post.

7. GAIN. This control is normally operated in its fully clockwise (CAL) position. Here, the display on the CRT may be measured in terms of P-P volts by using the graticule markings and the values set by the VOLTS/CM switch (11). It is sometimes desirable to adjust the trace to the full height of the graticule. In these instances, the GAIN control can be adjusted as desired, however, the display will be uncalibrated.

8. UNCAL indicator. This indicator lamp reminds the user that the vertical amplifier is uncalibrated when the Gain control is not fully clockwise.

9. AC-DC Coupling Switch. In the AC position of this switch, any DC component of the signal is removed. In the DC position, the signal is coupled directly to the vertical amplifier.

10. BAL Control. This control balances the DC amplifier circuits so no vertical trace shift occurs when the GAIN control is rotated.

11. VOLTS/CM. Each of the nine positions of this attenuator switch is marked for the number of volts (peak-to-peak) required to produce a pattern one centimeter high on the graticule. Note that the Volts/CM calibration is accurate only when the Gain control is fully clockwise, in the CAL position.

POSITIONING SECTION

12. VERTICAL. This control moves the trace up or down.

13. HORIZONTAL. This control moves the trace to the left or right.

TIME BASE SECTION

14. TRIGGER SOURCE. Internal, Line, or External triggering signals are selected by the TRIGGER SOURCE switch.

15. EXT Trigger Input Terminals. With the TRIGGER SOURCE switch in the EXT position, the horizontal sweep can be triggered from an external signal applied to these binding posts.

16. TRIGGER MODE, +/-. Selects the slope of the waveform, plus (+) or minus (-), that will be used to trigger the horizontal sweep. This permits the viewing of either positive or negative going signals.

17. TRIGGER MODE, AUTO/NORM. The NORM position allows the point on the waveform at which the sweep starts to be adjusted with the TRIGGER LEVEL control (20). In the AUTO position, the AC/DC switch (18) and the Trigger Level control (20) have no effect, and a trace is visible at all times.

18. TRIGGER MODE, AC/DC. With this switch in the AC position, any DC component in the trigger signal is removed, so DC shifts in the signal will not affect the trigger level. In the DC position the trigger signal is direct coupled and the sweep can be triggered from DC level changes, or very low frequency AC signals.

19. STABILITY. The STABILITY control adjusts the sweep generator circuits for stable operation. This control is adjusted without a trigger signal being applied, with the TRIGGER MODE at NORM, to a position just below the point where the sweep "free runs." It is not readjusted for the AUTO mode, and requires only occasional adjustment for unusual waveform displays.

20. TRIGGER LEVEL. This control adjusts the trigger circuits so the sweep can be started at any position on the input signal waveform. The sweep can be started on either a positive or negative slope, depending on the setting of the TRIGGER MODE +/- switch. The double arrow on the TRIGGER LEVEL control indicates an upward (+) or downward (-) movement of the triggering point on the display.

21. TIME/CM. The time required for the beam to sweep one centimeter is determined by the TIME/CM switch and the MULTIPLIER Switch (22). The switch positions are accurately calibrated, except when the MULTIPLIER switch is in the VAR (Variable) position.

22. MULTIPLIER. This switch multiplies the Time/CM setting by 1, 2, or 5, or connects the VARIABLE control (23) into the circuit.

23. VARIABLE. This control is used with the TIME/CM switch (21) to provide a continuous adjustment of sweep time. The Time Base is uncalibrated when the Multiplier is in the VAR position.

24. UNCAL Indicator. This neon lamp glows when the MULTIPLIER switch is in the VAR position, showing that the horizontal sweep (TIME BASE) is uncalibrated.

25. HOR DISPLAY Switch. The normal internal sweep is seen when this switch is in the X1 position. In the X5 (magnifier) position, the waveform is 5 times longer than in the X1 position. Thus, the TIME/CM figure must be divided by 5. Also, with the magnifier on, the intensity of the display will be reduced. This is because the beam only strikes the tube face 1/5 the normal time. The EXT position couples the HOR DISPLAY EXT Terminals into the circuit.

26. HOR DISPLAY EXT Terminals. These binding posts permit an external signal to be applied to the horizontal amplifier of the Oscilloscope.

27. EXT LEVEL. This control adjusts the length of the trace when an external signal is being used.

28. MAG ON Indicator. This neon lamp glows when the HOR DISPLAY switch is in the X5 position. This reminds the user that the magnifier is on, and the sweep time must be divided by 5 when making time measurements.

REAR PANEL CONNECTIONS

Refer to Figure 3-2.

Z-AXIS Input: With the shorting link removed, a signal can be coupled to these posts to intensity modulate the CRT electron beam. The brightness of the beam will increase when a negative pulse is applied.

DIRECT CONNECTION TO THE VERTICAL DEFLECTION PLATES

A signal can be applied directly to the vertical deflection plates of the CRT by connecting it to the two red binding posts inside the rear access door. The two clip leads that are normally on the outer pins of the 4-pin terminal strip, are moved to the two center pins to couple directly to the plates. NOTE: Avoid major changes in the position of these leads with respect to each other and the chassis, or the AC delay line coils may require readjustment when normal conditions are restored.

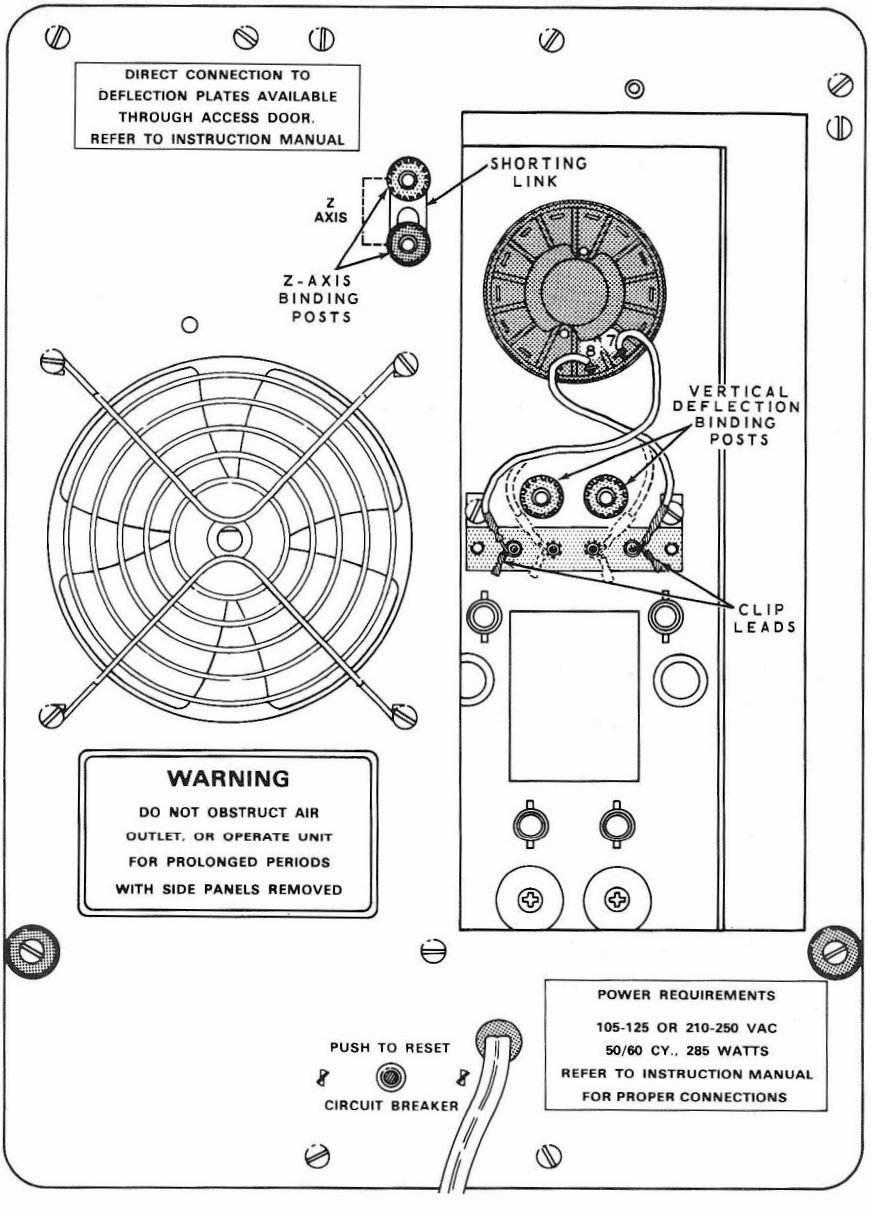

Figure 3-2

TIME/CM - TO - FREQUENCY CORRELATION

Use the following formula to determine the frequency of a waveform displayed on the CRT:

NOTE: The long vertical and horizontal lines on the graticule are spaced 1 cm (centimeter) apart. The short lines on the center vertical and horizontal lines are 2 mm (millimeters) apart. The usable graticule area is 6 cm high and 10 cm wide.

TIME/CM switch setting in seconds per cm X MULTIPLIER switch setting* X Number of centimeters on CRT for 1 cycle of the unknown frequency = Period of unknown waveform.

$$\frac{1}{\text{Period of unknown waveform}} = \text{Frequency of unknown waveform}$$

EXAMPLE: **.001 X 2 X 5 = .01 second**

$$\left[\frac{\text{1 M Sec}^{**}}{\text{TIME/CM switch setting in seconds per cm}}\right] X \left[\frac{2}{\text{MULTIPLIER switch setting*}}\right] X \left[\frac{5}{\text{Number of centimeters on CRT for 1 cycle of the unknown frequency}}\right] = \left[\frac{\text{.01 second}}{\text{Period of unknown waveform.}}\right]$$

$$\frac{1}{.01} = 100 \text{ cps}$$

*NOTE: The VAR setting of this switch cannot be used in this formula since there are no calibrated values associated with the VARIABLE control.

** (1 millisecond = .001 seconds)

NOTE: When the magnifier (HOR DISPLAY switch) is on, the display is made 5 times longer, thus, shortening the sweep time by a factor of 5.

TIME/CM FREQUENCY CORRELATION CHART

TIME/CM SWITCH	MULTI-PLIER	TIME FOR 1 CM SWEEP (HOR. DIS-PLAY X1)	FREQUENCY (CPS) FOR 1 CYCLE/10CM (full screen width)	TIME FOR 1 CM SWEEP (HOR DIS-PLAY X5)	FREQUENCY (CPS) FOR 1 CYCLE/10 CM (full screen width)
1 μ sec	X1	1 μ sec	100,000	.2 μ sec	500,000
1 μ sec	X2	2 μ sec	50,000	.4 μ sec	250,000
1 μ sec	X5	5 μ sec	20,000	1 μ sec	100,000
10 μ sec	X1	10 μ sec	10,000	2 μ sec	50,000
10 μ sec	X2	20 μ sec	5,000	4 μ sec	25,000
10 μ sec	X5	50 μ sec	2,000	10 μ sec	10,000
100 μ sec	X1	100 μ sec	1,000	20 μ sec	5,000
100 μ sec	X2	200 μ sec	500	40 μ sec	2,500
100 μ sec	X5	500 μ sec	200	100 μ sec	1,000
1 m sec	X1	1 m sec	100	200 μ sec	500
1 m sec	X2	2 m sec	50	400 μ sec	250
1 m sec	X5	5 m sec	20	1 m sec	100
10 m sec	X1	10 m sec	10	2 m sec	50
10 m sec	X2	20 m sec	5	4 m sec	25
10 m sec	X5	50 m sec	2	10 m sec	10
.1 sec	X1	.1 sec	1	20 m sec	5
.1 sec	X2	.2 sec	.5	40 m sec	2.5
.1 sec	X5	.5 sec	.2	.1 sec	1

OPERATIONAL EXAMPLE

The following example will help you become more familiar with the control functions, especially the sweep and trigger controls.

Connect a sine wave source of any frequency from 10 cps to 2 megacycles to the vertical INPUT connector. Set the TRIGGER SOURCE switch to INT, and the TRIGGER MODE switches to (+), AC, and NORM.

Set the TRIGGER LEVEL control all the way to either end of its rotation, and turn the STABILITY control fully clockwise. When a trace appears on the screen, slowly turn the STABILITY control counterclockwise until the trace just disappears; the STABILITY control should remain in that position, as it will seldom need adjustment. Do not try to use this control to stabilize the trace or sync. If the STABILITY control is ever adjusted for a complex or unusual waveform, it should be readjusted by following the instructions of this paragraph.

Now turn the TRIGGER LEVEL control to about the center of its rotation, where the trace should reappear. Adjust the VOLT/CM switch to obtain a trace 3 or 4 centimeters high. Adjust the HORIZONTAL POSITIONING control so the left edge of the trace is just inside the left margin of the graticule. Set the TIME/CM switch to display only a few cycles of the waveform. Adjust the VERTICAL POSITIONING control to center the trace vertically. Now carefully readjust the TRIGGER LEVEL control and observe how the left edge (starting point) of the sweep moves upward as the control is turned clockwise, and downward as the control is turned counterclockwise. See A on Figure 3-3. Switch

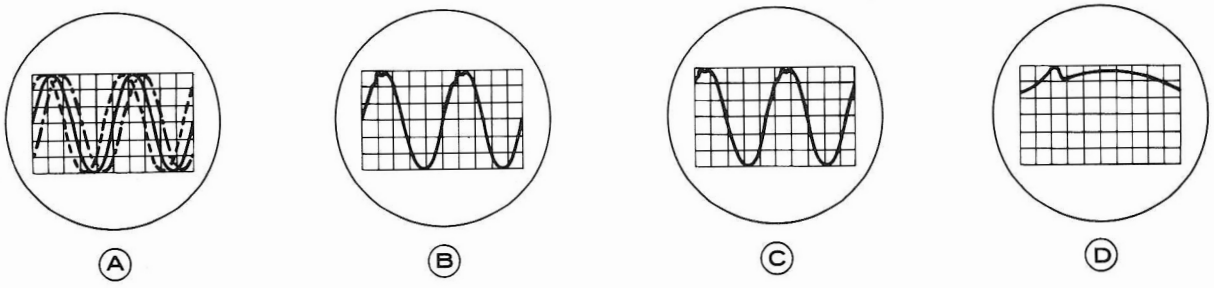

Figure 3-3

the TRIGGER MODE +/- switch to the (-) position, and note that the TRIGGER LEVEL control has the same effect except that the sweep start point is on the negative slope of the waveform.

There is no fixed rule for setting the TRIGGER LEVEL control, as no two waveforms are alike. For example, assume that you want to examine the "spike" on waveform B of Figure 3-3. By adjusting the TRIGGER LEVEL control so the sweep starts just before the spike, as in C in Figure 3-3, and decreasing the time required for one complete sweep by changing the position of the TIME/CM and/or MULTIPLIER switches, the spike can be spread out across a large area of the screen for closer observation.

The spike can also be enlarged by turning the HOR DISPLAY switch to X5. The spike will then be magnified as it is in D of Figure 3-3. By reading the TIME/CM and MULTIPLIER switch settings, the duration of the spike can be determined. This feature is also useful to observe distortion in circuits using square wave signals.

The TIME/CM and MULTIPLIER switches should be set to display the desired waveform or portion of a waveform. Occasionally it may also be necessary to use the VAR MULTIPLIER. However, the sweep time can not be calibrated when the VAR MULTIPLIER is used. Refer to the formula on Page 106, or the TIME/CM FREQUENCY Correlation Chart on Page 107 to determine unknown frequencies or sweep times when the calibrated positions of the TIME/CM and MULTIPLIER switches are used.

The TRIGGER SOURCE switch permits you to choose between internal, line, or external triggering signals. The INT (internal) trigger uses a portion of the vertical input signal. LINE triggering uses the 50/60 cycle power line frequency to trigger the sweep. The EXT (external) trigger position allows the sweep to be triggered from external sources, such as TV horizontal or vertical sync pulses, that are not necessarily related to the vertical input signal.

When the TRIGGER MODE AUTO/NORM switch is in the AUTO position, the TRIGGER LEVEL control and the TRIGGER MODE AC/DC switch are disabled, and a sweep appears on the screen even in the absence of a signal. The AUTO position is useful for simple waveforms with frequencies from about 100 cycles to 2 megacycles. This switch position is also useful for signals that are too weak to trigger the sweep circuits in the normal position.

The TRIGGER MODE AC/DC switch will normally be in the AC position except when using very low frequency or DC signals as a trigger source.

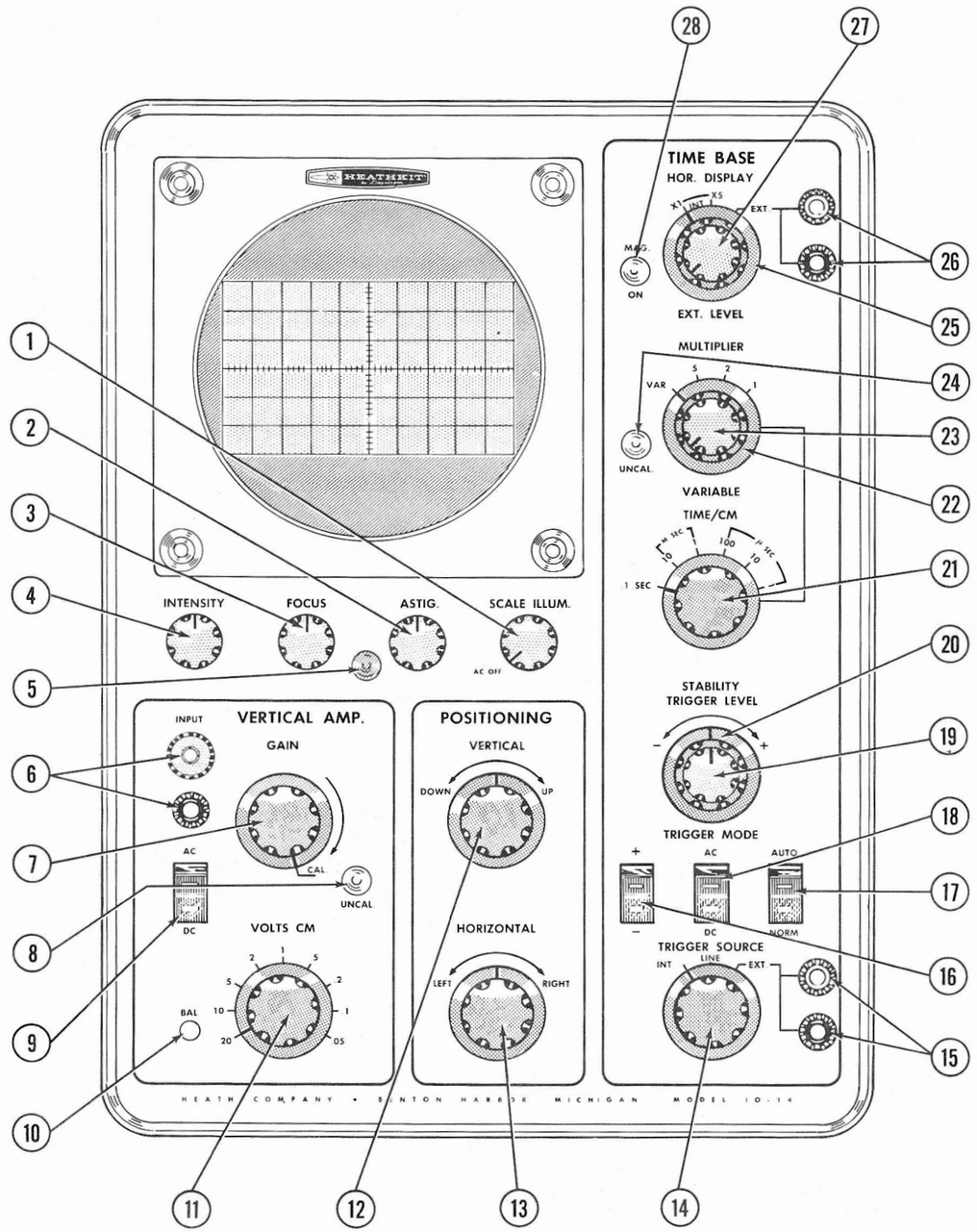

FIGURE 3-1

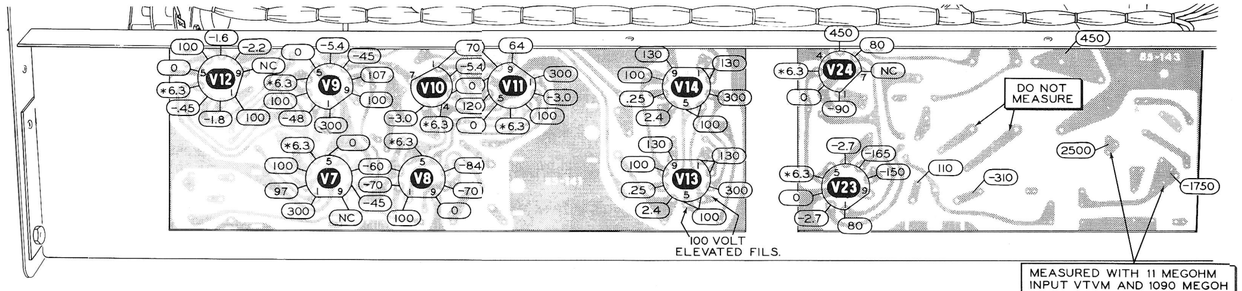

VOLTAGE CHARTS

THE FOLLOWING SWITCH AND CONTROL POSITIONS WERE USED TO OBTAIN THE VOLTAGES IN THE VOLTAGE CHARTS.

INTENSITY FOCUS ASTIG	FOR PROPER BRIGHTNESS AND SHARPEST TRACE.
VERTICAL AMP	
AC-DC GAIN VOLTS/CM INPUT SIGNAL	AC CAL (FULLY CLOCKWISE) .1 1 KC SINE WAVE AT .4 VOLTS
POSITIONING	
VERTICAL HORIZONTAL	TRACE CENTERED VERTICALLY TRACE CENTERED HORIZONTALLY
TIME BASE	
HOR DISPLAY MULTIPLIER TIME/CM TRIGGER LEVEL STABILITY TRIGGER MODE TRIGGER SOURCE	X1 2 1 M SEC CENTER OF ROTATION SET TRIGGER PROPERLY +, AC, AUTO INT

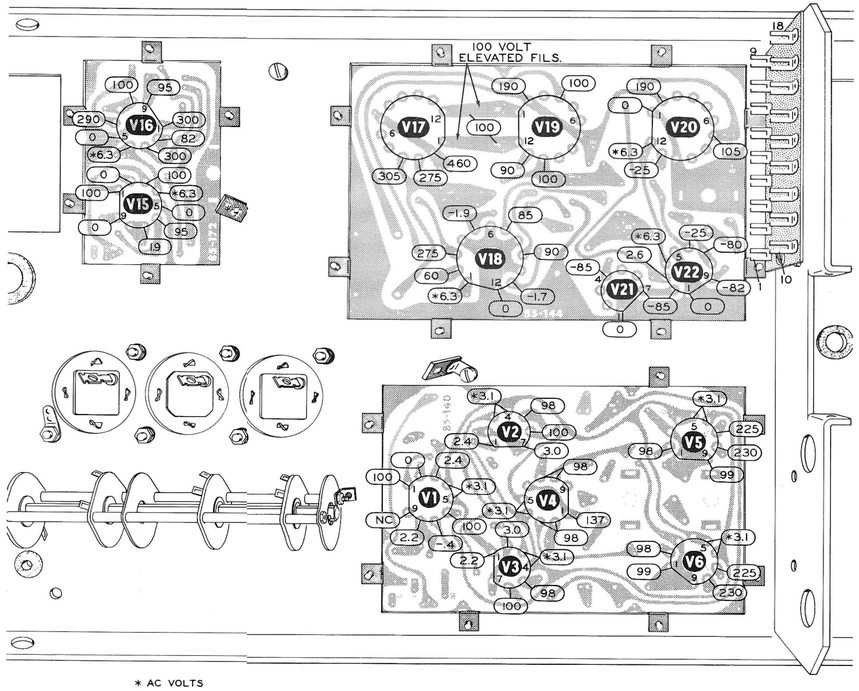

* AC VOLTS
ALL VOLTAGES TO CHASSIS GND.

IN CASE OF DIFFICULTY

NOTE: Refer to the Kit Builders Guide for Service and Warranty information.

This section of the Manual describes what to do if the Oscilloscope does not operate properly.

Circuit Board X-Ray Views (fold-out from Page 134), and Chassis Photographs (Page 134), have been furnished as an aid in locating components on the circuit boards and chassis.

Before you try to locate the cause of a trouble, be sure to check the operation of the controls. Difficulties may also be due to improper adjustments of the chassis controls. A recheck of these adjustments, as outlined in the Initial Test and Calibration sections, may help to locate the source of trouble.

WARNING: Since high voltages are present at many points throughout the Oscilloscope, caution should be taken to avoid personal shock.

GENERAL

The following paragraphs deal with the types of problems that may show up right after a kit is assembled. These difficulties are most likely to be caused by assembly errors or faulty soldering. The following checks will help you locate any error of this type.

1. The first step in looking for your difficulty is to make a thorough visual check of the whole unit to make sure there are no obvious causes, such as unsoldered connections, burned or overheated parts, bare wires touching each other, obviously faulty solder connections, etc. Make sure there are no bits of solder, wire ends or other foreign matter lodged in the wiring. Carefully check all terminals that have several wires attached to make sure that all wires, especially the lower ones, are soldered.

2. Check all wires to make sure they are connected to the right places. Usually, it is quite helpful to have a friend help you make these checks. Someone not familiar with the unit may notice an error that you have consistently overlooked.

3. Check to make sure that each of the tubes is in its proper location and that its filament is lit. Tube V21 and V25 do not have filaments. V21 should give off a pink or blue glow; V25 has no visual indication of operation.

4. Check all solder connections carefully to make sure they are bright and shiny. It is interesting to note that about 90% of the kits that are returned to the Heath Company for repair do not operate properly due to poor solder connections. Reheat and, if necessary, apply a little more solder to all questionable connections to make sure they are soldered as described in the Soldering section of the Kit Builders Guide.

5. Check all leads soldered to the foil side of the circuit boards. Be sure these leads do not protrude through the circuit board and short circuit component leads on the other side.

6. Check the values of resistors and capacitors to make sure the proper part is wired into the circuit in each position. It is sometimes easy to misread the third color band on a resistor. For example, if a 22 KΩ (red-red-orange) resistor were installed instead of a 220 KΩ (red-red-yellow) resistor, the circuit would not operate properly.

7. If, after careful checks, the trouble is still not located, check voltage readings against those shown in the Voltage Charts (fold-out from Page 110) and on the Schematic Diagram (fold-out from Page 139). All voltage readings were taken with an 11 megohm input vacuum tube voltmeter.

8. If all of the checks listed above have been made and the trouble still is not located, it may be helpful to refer to the Troubleshooting Chart.

9. A review of the Control Functions and Operation, or Circuit Description sections of the Manual may indicate some condition overlooked.

NOTE: A specific color code is used for the wires in this Oscilloscope. The following explanation of this color code may be helpful in circuit tracing.

Brown = +100 V DC.

White = -150 V DC.

Orange = +300 V DC.

Violet = +450 V DC.

Green = 6.3 V AC one-side-grounded filament.

White-green-green = 6.3 V AC center-tapped filament.

White-green = 6.3 V AC filament elevated +100 V DC above chassis.

Black = ground.

All other colors have no significance as to a particular function.

TROUBLESHOOTING CHART

This section of the Manual is provided to help you locate the circuit causing the trouble if the Oscilloscope does not function properly. Be sure you have checked the voltages in the low voltage power supply (see Initial Tests, Page 85) before using this Troubleshooting Chart. Improper supply voltages can be the cause of difficulty in any section of the Oscilloscope.

NOTE: The V number of a tube, when used in the following chart, refers both to the tube itself and to its associated circuitry.

VERTICAL

SYMPTOMS	POSSIBLE CAUSE
1. Balance control ineffective.	A. Control open. B. Resistors R15 through R19 wrong value. C. Tubes V1 through V6 defective.
2. Vertical Gain control ineffective.	A. Control or switch faulty. B. Control or switch wired improperly.
3. Vertical Positioning control ineffective.	A. Control open. B. Check for +300 V DC at center lug of control. C. Resistor R29 and/or R31 wrong value. D. Coils L1, L2, and L600 through L603 open. E. Tubes V4, V5, or V6 defective.
4. DC Trigger Adjust control ineffective.	A. Control open. B. NE-2 neon lamp defective. C. Capacitor C3 shorted. D. Improper voltages on tube V4A.
5. Gain Adjust control ineffective.	A. Control open. B. Check resistor R36 and capacitor C4. C. Tube V5 or V6 defective.
6. DC Delay Line Adjust control ineffective.	A. Either control open. B. One or more coils (L600 through L603) open. C. Resistor R616 and/or R622 wrong value. D. Either delay line open. E. Tube V5 or V6 defective.
7. Very poor high frequency response.	A. Vertical deflection plate leads improperly connected on 4-pin terminal strip.
8. Poor high frequency response above 5 megacycles.	A. Adjust coils L1 and L2 for a 3 db drop in signal level at 8 megacycles (referenced to 1 kilocycle). These coils are preset at the factory and need only a slight adjustment. Adjust the coils as a pair, as in the AC delay line termination adjustments (Page 96).

TRIGGER

SYMPTOMS	POSSIBLE CAUSE
1. Trigger Level control ineffective.	A. Control open. B. Resistors R643 and/or R645 wrong value. C. Capacitor C616 faulty. D. Auto-Normal switch wired improperly. E. Tube V15 defective.
2. Trigger point shifts between + and -.	A. Trigger Sensitivity control misadjusted.
3. Trigger point shifts between AC and DC trigger coupling.	A. DC Trigger Adjust control misadjusted.
4. Trigger Sensitivity control ineffective.	A. Control open. B. Resistor R207 and/or R211 wrong value. C. Tube V16 defective.
5. Auto position inoperative.	A. Switch wired improperly. B. Resistors R203, 204, and/or R205 wrong value. C. Check capacitor C200. D. Tube V16 defective.

SWEEP GENERATOR

1. Stability control ineffective.	A. Multivibrator not operating, V7 and/or V9 defective.
2. Trace brightness increases when Stability control is turned clockwise, but no sweep on CRT.	A. Tube V10 defective. B. Horizontal amplifier faulty. See horizontal amplifier section of chart.
3. Spot makes one sweep and remains at right side of CRT.	A. Sweep Length control set improperly. B. Tubes V8, V10, and/or V11 defective.
4. Sweep seems to operate normally, but trace is very dim at any sweep rate.	A. Hold-off circuitry not operating properly. Check resistors R111and R624. Check capacitors C626 through C629, and C637. B. Tube V8 defective.
5. Sweep Length control has no effect.	A. Control open. B. Resistor R112 and/or R118 wrong value. C. Tube V8 defective.
6. Sweep Position control has no effect.	A. Control open. B. Resistors R119, R121, and/or R122 wrong value.

HORIZONTAL AMPLIFIER

SYMPTOMS	POSSIBLE CAUSE
1. Horizontal section has no signal or control response.	A. Tubes V12, V13, and/or V14 defective.
2. Horizontal Positioning control has no effect.	A. Horizontal Position Preset control misadjusted. B. Resistors R638, R639, R641, and/or R642 wrong value.
3. Operates properly on Ext, but not on Int (X1 or X5) positions of Horizontal Display switch.	A. Switch wired incorrectly. B. Resistor R636 and/or R637 wrong value.
4. Sweep Calibrate control has no effect.	A. Control open. B. Resistor R138 wrong value. C. Tubes V13 and/or V14 defective.

LOW VOLTAGE POWER SUPPLY SECTION

1. -150 V output incorrect.	A. Check voltage between lugs 16 and 17 on 18-lug terminal board (see the Schematic). B. -150 V control defective. C. Resistor R425 and/or R424 wrong value. D. Capacitor C403 and/or C624 faulty. E. Tubes V20, V21, and/or V22 defective. F. Disconnect white wires from low voltage circuit one-at-a-time, to check for excessive load.
2. +100 V output incorrect.	A. -150 V level incorrect. B. Check voltage between lugs 13 and 14 on 18-lug terminal board (see the Schematic). C. Resistor R415 and/or R422 wrong value. D. Capacitor C623 and/or C402 faulty. E. Tube V18 and/or V19 defective. F. Disconnect brown wires from low voltage circuit board one-at-a-time, to check for excessive load.
3. +300 V output incorrect.	A. -150 V level incorrect. B. Check voltage between lugs 11 and 13 of 18-lug terminal board (see the Schematic). C. Resistors R417, R419, and/or R651 wrong value. D. Capacitor C622 and/or C401 faulty. E. Tube V17 and/or V18 defective. F. Disconnect orange wires from the low voltage circuit board one-at-a-time, to check for excessive load.

LOW VOLTAGE POWER SUPPLY (cont'd.)

SYMPTOM	POSSIBLE CAUSE
4. +450 V output incorrect.	A. Wide variations can be expected as this voltage is not regulated. B. Capacitor C622 and/or C623 faulty. C. Disconnect violet wires one-at-a-time, to check for excessive load.

HIGH VOLTAGE POWER SUPPLY

1. Output voltage too low or no spot on CRT.	A. High Voltage Adjust control open or wrong value. B. Resistor R500 wrong value. C. Capacitor C509 faulty. D. Tube V23 defective. E. Low voltage at lug 3 of transformer T501. F. T501 faulty or has broken lead.
2. Cannot reduce output voltage to suitable level.	A. High Voltage Adjust control open or wrong value. B. Resistor R512 and/or R513 wrong value. C. Capacitor C508 faulty. D. Tube V23 defective.
3. Starting portion of trace has normal brightness, but beam goes out on right side of CRT at low sweep rates.	A. Resistor R514 and/or R515 wrong value. B. Tube V25 defective.
4. Cannot reduce intensity of trace with Intensity control.	A. High Voltage Adjust control set improperly. B. CRT socket or Intensity control wired incorrectly. C. Tube V9 defective. D. Heater-to-cathode short in CRT (V26).

SPECIFICATIONS

VERTICAL CHANNEL

Input Impedance	1 megohm shunted by 15 $\mu\mu$f.
Sensitivity, AC or DC	.05 volts per centimeter.
Frequency Response	DC to 5 megacycles: -1 db or less. DC to 8 megacycles: -3 db or less.
Rise Time	.04 microsecond.
Signal Delay	.25 microsecond; permits viewing of leading edge of waveform.
Attenuator	9-position, switch type, fully compensated; calibrated in a 1, 2, 5 sequence from .05 volts per centimeter, ±3% accuracy on each step. Continuously variable (uncalibrated) control between steps.
Maximum Input Voltage	600 volts peak-to-peak; 120 volts provides full 6 centimeter pattern in least sensitive position.

HORIZONTAL CHANNEL

Time Base	Triggered with 18 calibrated rates in a 1, 2, 5 sequence from .5 second per centimeter to 1 microsecond per centimeter, ±3%. Continuously variable rates (uncalibrated) within the same range.
Sweep Magnifier	X5; fastest sweep rate becomes .2 microsecond per centimeter. Overall time base accuracy of ±5% with magnifier on.

Triggering Frequency Response	DC to approximately 2.5 MHz.
Triggering Capability	Internal, External, or Line triggering signals may be switch selected. Selection of + or - slope, (with Trigger Level control). Selection of AC or DC coupling. Auto position for normal signals without use of Trigger Level control.
Triggering Requirements	Internal: 1/2 centimeter to 6 centimeter display. External: .5 volt to 120 volts peak-to-peak.
Horizontal Input	1 volt per centimeter, uncalibrated. Continuous gain control (Ext Level). Bandwidth DC to 200 kilocycles, -3 db or less.

GENERAL

Input Connections	Vertical input: Coaxial connector with a binding post as an added ground connection; 3/4" spacing. Horizontal and Trigger Source: Binding posts with 3/4" spacing. Z-axis and direct vertical plate connections are also provided.
Power Supply	All critical DC voltages are electronically series regulated to compensate for variations in line voltage.
CRT Type	5ADP31 or 5ADP2. Interchangeable with any flat face 5AD or 5AB series tube for different phosphor characteristics.
CRT Accelerating Potential	Approximately 4250 volts DC.
Retrace Suppression	DC coupled cathode ray tube unblanking, for complete retrace suppression.
Graticule	6 cm x 10 cm grid, edge lighted; 1 cm major divisions and 2 mm minor divisions.
Front Panel Features	Panel lamps to indicate Magnifier ON and uncalibrated operation. Color-coded panel markings and knobs, grouped for ease of operation.
Power Requirements	105-125 volts or 210-250 volts, 50/60 cps AC. 285 watts. 3-wire power cord to provide grounding of the chassis.

MECHANICAL SPECIFICATIONS

Ventilation	Forced air cooling for continuous duty operation.
Dimensions	10-1/2" wide x 15" high x 22" deep (overall dimensions, including knobs, connectors, handle, etc.).
Net Weight	40 lbs.

TUBE COMPLEMENT

VERTICAL AMPLIFIER
1 - 6DJ8 Input cathode follower.
2 - 6EW6 Amplifier.
1 - 6DJ8 Interstage cathode follower.
2 - 12GN7 Output amplifier.

HORIZONTAL AMPLIFIER
1 - 6BQ7 Input cathode follower.
2 - 6AW8 Amplifier.

SWEEP GENERATOR
1 - 6BQ7 Multivibrator/cathode follower.
1 - 6GH8 Multivibrator/cathode follower.
1 - 6AL5 Coupling diode.
1 - 6GH8 Miller integrator/output cathode follower.
1 - 12AT7 Sweep length cathode follower.

TRIGGER GENERATOR
1 - 6GH8 Phase inverter.
1 - 6GH8 Schmitt Trigger.

LOW VOLTAGE POWER SUPPLY
1 - 6GH8 -150 volt control.
1 - 5651 Reference tube.
1 - 6J11 +100 V and +300 V control tube.
3 - 6GE5 Series pass tube.

HIGH VOLTAGE POWER SUPPLY
1 - 12AU7 Oscillator control.
1 - 6AQ5 Oscillator.
1 - HV-173 Pulse coupling.
1 - 5ADP2 or 5ADP31 CRT. 5", medium-persistence phosphor. Interchangeable with any 5AD - 5AB - series tube for different phosphor characteristics.

The Heath Company reserves the right to discontinue instruments and to change specifications at any time without incurring any obligation to incorporate new features in instruments previously sold.

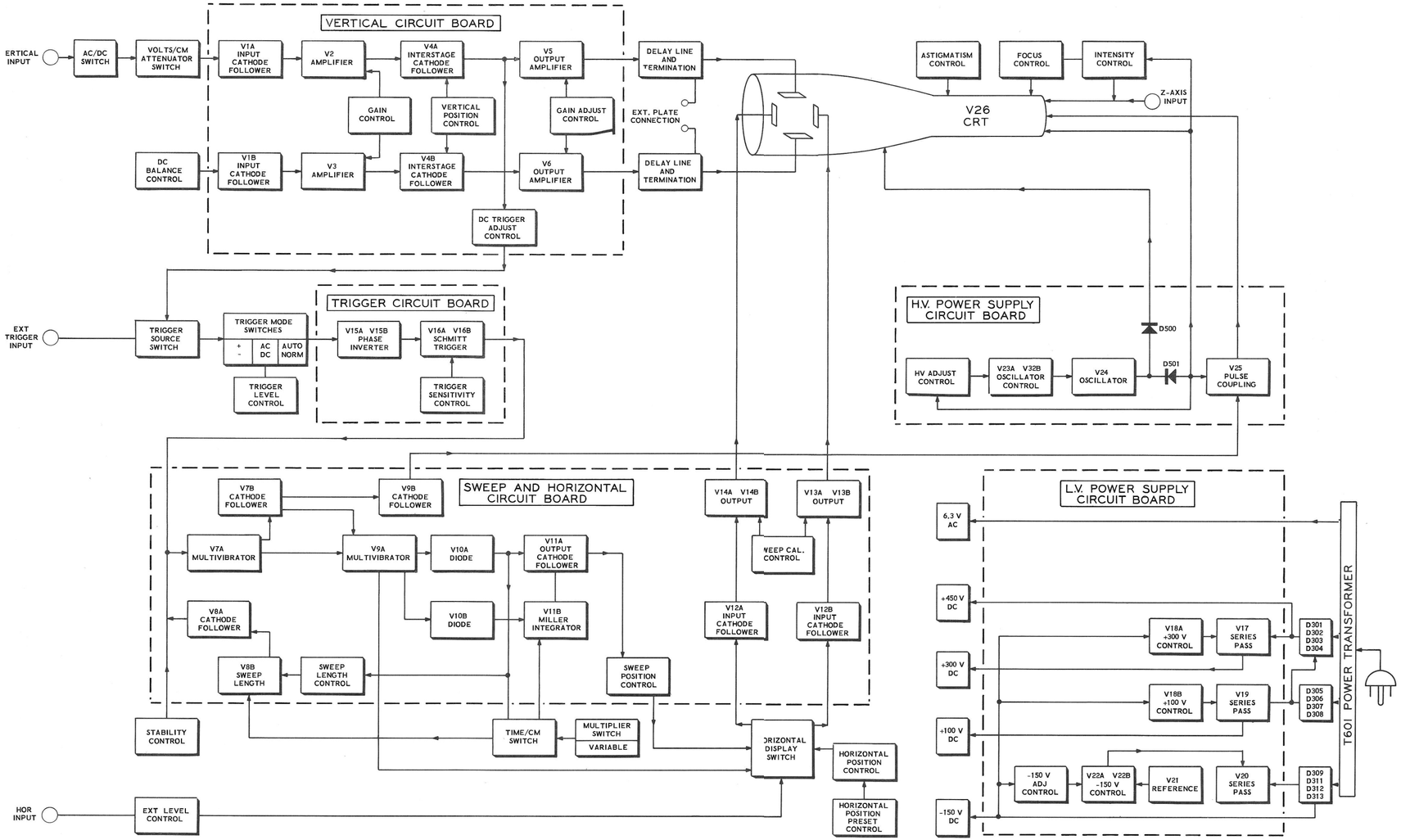

BLOCK DIAGRAM

CIRCUIT DESCRIPTION

Refer to the Schematic (fold-out from Page 139) while reading this Circuit Description. It might also be well to study the Block Diagram (fold-out from Page 120) before reading the description, to become familiar with the general layout of the various circuits.

Resistor and capacitor numbers are in the following groups:

0- 99	Parts mounted on the Vertical Circuit Board.
100-199	Parts mounted on the Sweep and Horizontal Circuit Board.
200-299	Parts mounted on the Trigger Circuit Board.
300-399	Parts mounted on the Diode Terminal Board.
400-499	Parts mounted on the Low Voltage Power Supply Circuit Board.
500-599	Parts mounted on the High Voltage Power Supply Circuit Board.
600-699	Parts not mounted on the circuit boards.

The Heathkit Model IO-14 Oscilloscope is composed of the following sections: The Vertical circuits, the Trigger circuits, the Sweep and Horizontal circuits, the Low Voltage Power Supply circuits, and the High Voltage Power Supply circuits. Each of these sections is identified on the Schematic. The Block Diagram shows the signal and control paths between the sections.

The several rotary switches used in the IO-14 are identified on the Schematic just as they appear on the front of the Oscilloscope. Each switch wafer is assigned a number and a letter. The number shows the wafer's position with respect to the knob end of the switch. The letter shows whether this section of the switch is on the front (F) or rear (R) side of the wafer. Thus, the designation 3R would refer to the third wafer from the knob end of the switch, and the rear side of this wafer. All rotary switches are shown in position one, fully-counterclockwise.

VERTICAL CIRCUITS

VOLTS/CM ATTENUATORS

When the AC/DC switch is in the DC position, a signal applied to the vertical input connector is coupled through parasitic suppression resistor R600 to the attenuator. When the AC/DC switch is in the AC position, the signal must go through capacitor C600, which passes only the AC signals. This permits an AC signal to be seen superimposed on a DC potential without the DC component being displayed.

The vertical circuits operate at a fixed level of amplification. A signal of .05 volts at the input of the vertical amplifier will cause a vertical deflection of one centimeter on the cathode ray tube. To permit larger signals to be viewed, the Volt/CM switch inserts the proper attenuators in the signal path, reducing the level at the input of the vertical amplifier. The gain of this amplifier is adjusted to meet the requirements of the cathode ray tube. In the .05 position of the Volts/CM switch, the signal passes directly to the input of the amplifier without attenuation. In all other positions, the Volts/CM switch inserts the proper attenuators in the signal path, reducing the level at the input of the vertical amplifier. The gain of this amplifier is adjusted to the proper point during calibration, and is constant for all positions of the Volts/CM switch. Any long term shift in amplifier gain will cause a proportionate change in accuracy for all positions of the switch.

There are four attenuator networks associated with the Volts/CM switch, giving X2, X4, X10, and X100 reduction of signal. The following combinations of these networks are used in the different switch positions:

SWITCH POSITION	NETWORKS	ATTENUATION
.05 V/CM	NONE	0
.1 V/CM	X2	X2
.2 V/CM	X4	X4
.5 V/CM	X10	X10
1 V/CM	X10 and X2	X20
2 V/CM	X10 and X4	X40
5 V/CM	X100	X100
10 V/CM	X100 and X2	X200
20 V/CM	X100 and X4	X400

The greatest amount of attenuation is inserted when the Volt/CM switch is in the "20" position, as shown on the Schematic. The signal passes through contacts 11 and 6 of wafer 1F to the X100 attenuator network (C605, C606, R603, and R604). From the X100 network, the attenuated signal is coupled through contacts 6 and 3 of wafer 2F and contacts 3 and 5 of wafer 3F to the X4 attenuator network (C609, C611, R607, and R608). The attenuated signal is then coupled through contacts 5 and 3 of wafer 4F, and through resistor R611 and capacitor C612, to the input of the vertical amplifier. Resistor R611 and capacitor C612 keep input cathode follower tube V1 from being damaged in case a high DC potential is accidentally applied to the input connector with the Volts/CM switch in one of the lower positions.

A 20 volt signal fed to the vertical input connector, with the switch in the 20 V/CM position, is reduced X400 to provide a signal level of .05 volts entering the vertical amplifier. Refer to the following Chart for the attenuator networks and switch wafer contacts that are used in other positions of the Volts/CM switch.

VOLTS/CM Position	Wafer 1 Contacts	Network	Wafer 2 Contacts	Wafer 3 Contacts	Network	Wafer 4 Contacts
20	11-6	X100	6-3	3-5	X4	5-3
10	11-6	X100	6-3	3-9	X2	9-3
5	11-6	X100	6-3	3-12	direct	12-3
2	11-9	X10	9-3	3-5	X4	5-3
1	11-9	X10	9-3	3-9	X2	9-3
.5	11-9	X10	9-3	3-12	direct	12-3
.2	11-12	direct	12-3	3-5	X4	5-3
.1	11-12	direct	12-3	3-9	X2	9-3
.05	11-12	direct	12-3	3-12	direct	12-3

To compensate for the "low capacitance" probes that might be used, the input capacitance of the Oscilloscope can be made equal on all positions of the Volts/CM switch. Capacitor C604 is the adjustment for the 20, 10, and 5 positions of the switch and C601 for the 2, 1, and .5 positions.

VERTICAL AMPLIFIER

Both sections of V1 are used as cathode followers. V1A passes the signal, while V1B passes a DC potential of the proper amplitude and polarity to cause the voltage at the cathode of V3 to equal the voltage at the cathode of V2. The DC voltage passing through V1B is controlled by the Balance control and resistors R16 and R18. Capacitors C1 and C2 bypass any stray signals appearing at the grid and cathode of V1B. R17 is for parasitic suppression.

The signal from V1A is applied to the grid of V2 and amplified. At the same time, a signal of the same phase is produced at the cathode of V2. This signal is coupled through the Vertical Gain control to the cathode of V3, an amplifier stage that is identical to V2. V3 functions as a grounded-grid amplifier, and the amplified signal at the plate of V3 is 180 degrees out-of-phase with the signal at the plate of V2. When the Vertical Gain control is rotated fully clockwise to close the Calibrate switch, the cathodes of V2 and V3 are connected together. A neon indicator lamp, marked "Uncal," glows when the Vertical Gain control is NOT fully clockwise.

When the resistance of the Vertical Gain control is inserted between the cathodes of V2 and V3, the drive to V3 is reduced, and degeneration which reduces the overall gain, occurs in the cathode circuit of these tubes. Note that since the cathode voltages of V2 and V3 are equal (set by the Balance control), no DC current flows through the Vertical Gain control, and thus no change in DC bias occurs as the Vertical Gain control is adjusted. Peaking coils L1 and L2, and resistors R4 and R25 improve the high frequency response. Resistors R5, R6, R23, and R24 are for parasitic suppression.

The out-of-phase or "push-pull" signal developed at the plates of V2 and V3 is then applied to the grids of V4A and V4B, a dual cathode follower. These cathode followers improve the bandwidth by reducing the loading effect that V5 and V6 present on V2 and V3. The Vertical Positioning control unbalances the voltages appearing at the grids of V4A and V4B by causing unequal currents to flow through plate load resistors R7 and R26. When the control is at mid-position, equal DC currents flow through the plate loads and the DC level at the grids of V4A and V4B are equal. As the control is rotated either way from center, the plate current flow becomes unbalanced and the DC voltages at the grids of V4A and V4B change without affecting the amplitude of the signal.

The signal is coupled from the cathodes of V4A and V4B to the grids of V5 and V6 through parasitic suppression resistors R13 and R34. The overall gain of the amplifier is set by adjusting the amount of degeneration introduced by the Gain Adjust control in the cathode circuits of V5 and V6. Capacitor C4 improves the high frequency response by providing a high frequency path around the Gain Adjust circuitry.

From the plates of the output amplifier tubes V5 and V6, the signals are passed through the delay lines and termination networks to the CRT (cathode ray tube). The delay lines delay the signal to the vertical plates of the CRT for one-quarter of a microsecond. This allows the complete leading edge of a waveform to be displayed on the CRT, since the same waveform triggers the horizontal sweep one-quarter of a microsecond before the waveform appears on the screen.

Coils L600 through L603 cause the load impedance presented by the vertical deflection plates of the CRT to match the impedance of the delay lines at high frequencies. Controls R615 and R623 match the impedance at DC and very low frequencies. Capacitors C613 and C614, and resistors R618 and R619, permit signals to be connected directly to the vertical deflection plates of the CRT. R617 and R621 reduce the "Q" of L601 and L602 to the proper value.

An internal sync (trigger) signal is taken from the cathode of V4A. The neon lamp (NE-2) is used as a coupler for the sync signal to reduce the DC voltage present on the cathode of V4A without reducing the AC component. This sync signal is applied to the DC Trigger Adjust control, and is adjusted so the signal is superimposed on a zero volts DC reference. Capacitor C3 improves the high frequency response of the sync take-off circuitry.

TRIGGER CIRCUITS

TRIGGER SOURCE AND MODE SWITCHING

Lugs 1, 2, 3, and 4 of the Trigger Source switch select the signal that will be used to trigger the sweep circuits. When this switch is in the Internal position, a portion of the waveform being viewed is taken from the DC Trigger Adjust control in the vertical amplifier. In the Line position, a low level AC voltage is applied from the power transformer. In the Ext position, any signal from .5 volts to 120 volts (peak-to-peak) may be applied to the Ext Trigger connector.

From lug 1 of the Trigger Source switch, the input triggering signal is either coupled through capacitor C617 (AC signals), or through lugs 1 and 2 of the Auto-Norm switch and lugs 1 and 2 of the AC-DC switch (DC signals), to resistor R647 and capacitor C618. This resistor and capacitor keep phase inverter stage V15 from being damaged, by limiting excessive grid current.

From R647 and C618, the signal is coupled through lugs 10 and 9 of the Trigger Source switch to the +/- Trigger Mode switch. This switch selects the polarity of the waveform to be used as a trigger by feeding the signal to either one of two phase inverter stages, V15A or V15B. R648 and R649 suppress parasitic oscillations.

PHASE INVERTER

When the +/- Mode switch is in the plus (+) position, the trigger signal is coupled through lugs 3 and 2 to the grid of cathode follower V15A, and through the common cathode connection to V15B. This drives V15B as a grounded-grid amplifier, and an amplified signal appears at its plate. The DC voltage at the grid of V15B is set by the Trigger Level control and resistors R643 and R645. This voltage is coupled to V15B through lugs 12 and 11 of the Trigger Source switch and lugs 4 and 5 of the +/- Mode switch.

The Trigger Level control changes the DC level at the plate of V15B without varying the AC signal level by changing the grid bias. Note that this DC voltage is shorted out in the Auto position by lugs 8 and 9 of the Auto-Norm switch, therefore the grid of V15B is grounded through resistor R649. This disables the Trigger Level control when Auto triggering is used.

When the +/- Mode switch is in the minus (-) position, the connections for the trigger signal and the DC voltage from the Trigger Level control are reversed. The trigger signal is fed directly to the grid of V15B, and the DC voltage is fed to the grid of V15A. Since the input signal is now fed into the grid instead of the cathode of V15B, the signal at the plate is 180 degrees out-of-phase with the signal that was at this plate for the plus (+) mode. The DC voltage effects the same change at the plate of V15B as it did for the plus (+) mode, but it is now fed to V15B through the common cathode connection from V15A.

The trigger signal appears at the plate of V15B in the phase selected by the +/- Mode switch. It is superimposed on the DC plate voltage of V15B, which is set by the Trigger Level control. This composite signal is passed through R202, R204, C200, and R203 (in the Norm Mode) to the grid of V16A. In the Auto Mode, the signal passes only through C200 and R203. This removes the DC level which would prevent automatic operation.

SCHMITT TRIGGER

From the plate of V15B, the trigger signal is coupled to the Schmitt trigger circuit of V16A and V16B. In this circuit, V16A normally conducts while V16B is held at cutoff. These conditions begin to reverse when the negative-going portion of the signal from V15B causes V16A to begin to cutoff, causing its plate voltage to rise. This positive-going plate voltage is coupled through R207 and C201 to the grid of V16B, causing it to conduct, which further increases the positive potential on both cathodes and further cuts off V16A. This action is regenerative and occurs very quickly when a negative-going voltage is applied to the grid of V16A. The circuit rapidly

returns to its normal state after this negative voltage is removed or reduced sufficiently.

In the Norm position of the Auto-Norm switch, the grid of V16A is DC coupled to the plate of V15B. Any change in the DC level at the plate of V15B will change the bias on V16A. This DC level, which is governed by the Trigger Level control as explained previously, controls the firing point of V16. The point at which the trigger is fired, on the signal waveform slope, is equal to the sum of the trigger signal and the DC components that appear at the grid of V16A.

The Trigger Sensitivity control adjusts the amount of voltage swing that is needed at the plate of V16A to fire the Schmitt trigger and produce the trigger pulse at the plate of V16B. This trigger pulse, which is actually the fast falling voltage across plate resistor R209, is coupled to the sweep circuits through capacitor C202.

In the Auto position, V16 self-oscillates at a frequency of around 50 cycles per second. This frequency is determined primarily by capacitor C200 and resistor R205. When a trigger signal of sufficient amplitude is applied to the grid of V16A, the operation of the circuit is basically the same as in the Norm mode. Note that the Trigger Level control is shorted out during Auto operation so it does not disturb the firing point of V16.

The main advantage of Auto operation is that the trigger circuit operates by itself in the absence of a signal, and causes the sweep circuits to keep a trace visible on the screen.

SWEEP GENERATOR CIRCUITS

The complete sweep circuit consists of the following ten tube stages with their associated circuit components: V7A, V7B, V8A, V8B, V9A, V9B, V10A, V10B, V11A, and V11B. The heart of this sweep circuit is the Miller integrator circuit of V11B. Refer to the simplified schematic of Figure 5-1 while reading the following paragraphs.

The sawtooth sweep waveform is formed by charging a (timing) capacitor through a (multiplier) resistor. The charging of this capacitor is made linear by the following feedback action of V11B. (Consider diodes V10A and V10B to be an open circuit for the charging cycle.) As the capacitor begins to charge, the grid of V11B begins to go negative and the plate begins to go

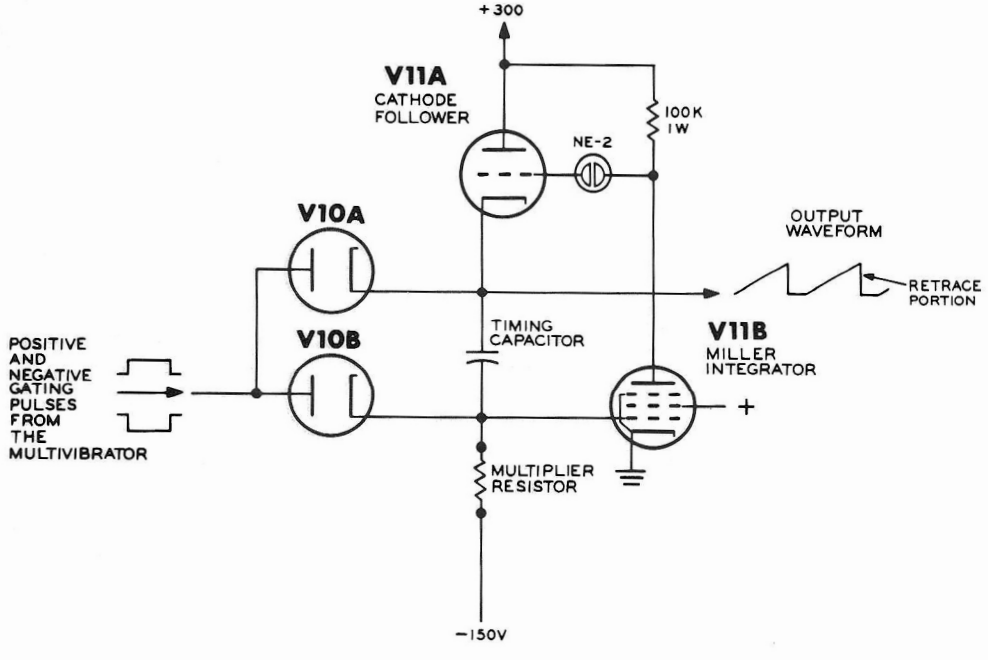

Figure 5-1

positive. This positive-going voltage, which is fed back to the timing capacitor through the neon lamp and cathode follower V11A, causes the capacitor to charge linearly.

Diodes V10A and V10B control the charge and discharge of the timing capacitor. When these diodes are not conducting, the capacitor charges. When these diodes conduct they cause the capacitor to discharge rapidly, and this rapid discharge produces the retrace portion of the output sawtooth waveform.

Figure 5-2 is a block diagram of the complete sweep circuit. The linearly rising voltage from the Miller Integrator circuit is fed back through cathode followers V8A and V8B, a sweep hold-off circuit, to the input of the multivibrator circuit, V7A and V9A. Here, the waveform triggers the multivibrator. The multivibrator then causes the diodes to start conducting, and the wait time of the sawtooth is formed. The only purpose the multivibrator circuit has in this sweep generator is to furnish V10A and V10B with these charge (-) and discharge (+) gating pulses that start and stop the sawtooth.

The sweep hold-off circuit alters the retrace portion of the sawtooth waveform and causes it to decrease less rapidly toward its minimum voltage point. This new waveform is then fed back to the input of the multivibrator circuit, where it keeps the next sweep from starting until the timing capacitor has had time to discharge.

Cathode follower V7B is connected between the plate circuit of V7A and the grid of V9B to minimize capacitive loading and to shorten the multivibrator switching time. Cathode follower V9B couples an unblanking signal to the grid of the CRT.

SAWTOOTH GENERATOR

The sawtooth generator is composed primarily of tube V11B, tube V11A, the timing capacitor, and the multiplier resistor. The Time/CM switch selects the timing capacitor (C631 through C636) for the desired sweep speed, and the Multiplier switch selects one of the multiplier resistors (R626 through R632, and the Variable control). All of these components except the Variable control, are accurate and stable to allow accurate sweep calibration. The time required to charge a given capacitor to a certain level is always the same whenever the Time/CM and Multiplier switches are placed in a given position. A neon indicator labeled Uncal is turned on when the Multiplier switch is in the Variable position.

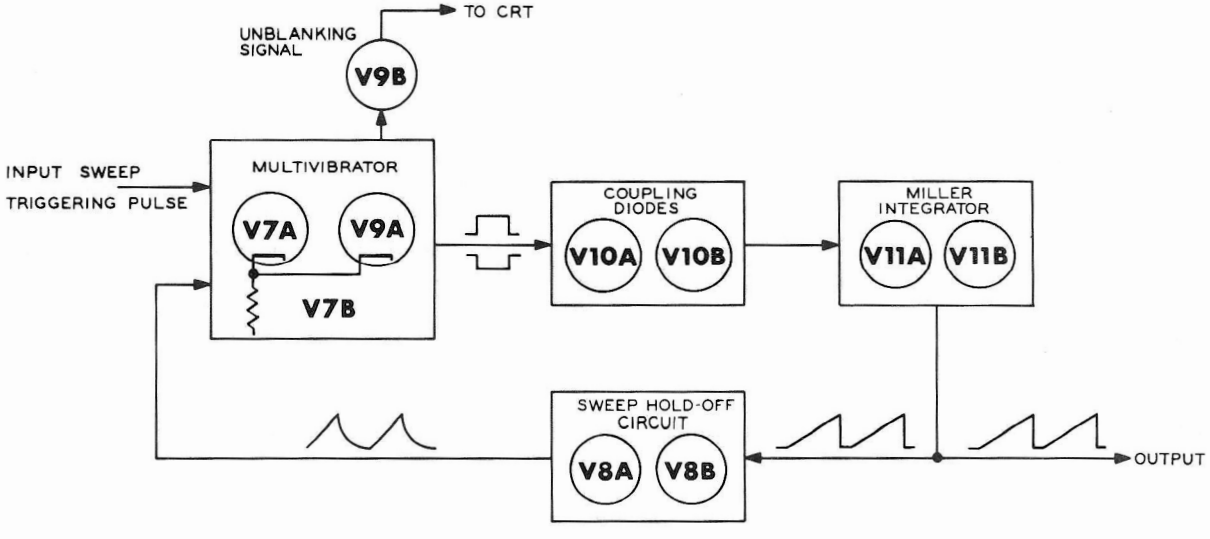

Figure 5-2

The sawtooth generator operates as follows: A capacitor is selected by the Time/CM switch and a resistor is selected by the Multiplier switch. During the "no-sweep" condition, diodes V10A and V10B conduct and hold the grid of V11B and the cathode of V11A at fixed potentials. When the multivibrator changes state, the voltage at the plate of V9A goes negative, allowing V10A and V10B to cut off, and the timing capacitor begins to charge through the multiplier resistor. As this happens, the grid of V11B goes negative and causes its plate to go more positive. This drives the grid of V11A in a positive direction also, but at a level approximately 55 volts lower than the plate of V11B because of the drop across the neon lamp. This changing voltage is applied through cathode follower V11A to the other end of the timing capacitor. This positive-going voltage is passed through the capacitor to the grid of V11B where it tends to cancel the negative-going voltage caused by the current flow into the capacitor from the -150 volt supply. Thus, the voltage at the grid of V11B is held at a nearly constant level by a feedback signal that passes through the neon lamp, V11A, and the timing capacitor. Since the grid voltage is nearly constant, and the multiplier resistor is connected between the grid and the -150 volt supply, the current flow through the resistor into the capacitor is nearly constant and the capacitor is charged at a linear rate.

The sawtooth output waveform is taken from the cathode of V11A, since the impedance at this point is very low and the output signal can be passed through the necessary networks and switches with a minimum of loss and distortion. From V11A, this output signal passes through a network consisting of R119, R121, R122, X5 Sweep Linearity Adjust trimmer capacitor, and the Sweep Position control.

The Sweep Position control is set to give the signal a zero volt DC average level. That is, the sweep extends equally positive and negative from the zero level, instead of sweeping from the essentially zero to +150 volt level that appears at the cathode of V11A. The X5 Sweep Linearity trimmer is for AC compensation of this network.

A portion of the sawtooth waveform is also coupled through resistor R118 and the Sweep Length control to the grid of V8B. This circuit which controls the end of the sweep, or the stopping point, will be described in the next section.

MULTIVIBRATOR

The multivibrator is composed of V7A and V9A. Cathode follower V7B is connected between V7A and V9A to minimize capacitive loading and to shorten the switching time between the on and off state. In this circuit the multivibrator is used as an electronic switch to rapidly start and stop the sawtooth sweep generator.

With the multivibrator at rest, the Stability control is adjusted so that V7A is conducting. This in turn, holds V9A at cutoff, makes the plates of disconnect diodes V10A and V10B positive, and causes the diodes to conduct and hold the sawtooth generator in the no sweep condition.

When a negative pulse is received from the trigger generator, V7A cuts off and rapidly causes V9A to conduct. V7A is then held at cut-off by the positive voltage on the common cathode connection. With V9A conducting, the reduced positive voltage on the plates causes diodes V10A and V10B to stop conducting, and allows the sawtooth generator to function. Additional trigger pulses now have no further effect, since V7A is fully cut off.

Part of the output sawtooth waveform is applied to the grid of V8B, causing its cathode voltage to rise with the waveform. This voltage rise is coupled to the grid of V8A, and through its cathode and R101 to the grid of V7A. When this positive-going voltage reaches the proper level, V7A will conduct and the multivibrator will abruptly return to its rest or "sweep-off" condition. This in turn causes the disconnect diodes V10A and V10B to conduct and discharge the timing capacitor.

Although the timing capacitor discharge occurs quite rapidly, there is a brief time required for the circuit to stabilize before another charging cycle can be started. This is called the "wait" or "hold-off" time. This time is controlled by capacitors C626 through C629, and C637, which are selected by the Time/CM switch. C637 (and one of the other capacitors on the four lowest sweep rates) is charged when the cathode of V8B is going positive during the sweep. The relatively long time it takes to discharge these capacitors through 3.3 megohm resistor R111, after the sweep is stopped, holds the grid of V7A sufficiently positive to prevent the multivibrator from operating. This keeps another sweep from starting before the sweep circuits have stabilized. Once C637 has discharged, a negative-going trigger pulse can again initiate a sweep.

Cathode follower V9B couples the signal from the cathode of V7B to the CRT grid circuit at a low impedance. The signal voltage at the plate of V7A and at the cathode of V9B is positive only during sweep. This voltage is used to turn on the CRT beam during the sweep. Further reference to this voltage will be made in the HV Power Supply and CRT sections.

HORIZONTAL AMPLIFIER

HORIZONTAL DISPLAY SELECTION

The Horizontal Display switch selects either the Internal sweep X1 or X5 (magnified), or an External signal. In the X5 position, the sawtooth signal from the sweep generator is applied to the horizontal amplifier without attenuation. In the X1 position, the sawtooth signal is attenuated to one-fifth of its amplitude by resistors R636 and R637. Capacitors C615 and X1 Sweep Linearity trimmer provide AC compensation for this divider. In the Ext position an external signal can be fed to the horizontal input binding posts, adjusted by the Ext Level control, and coupled to the horizontal amplifier.

HORIZONTAL AMPLIFIER

The Horizontal Positioning control applies a DC voltage to the grid of V12B. Resistors R638 and R639 keep this voltage in proportion with the signal amplitude, and R634 is for parasitic suppression. The signal passes through R633 to the grid of cathode follower V12A, and from its cathode to the grid of V14A. The positioning voltage follows a similar path through V12B to V13A. C102 bypasses any stray signals at the cathode of V12A. Resistors R129, R131, R132, and R137 are for parasitic suppression.

The signal applied to the grid of V14A produces an amplified signal at its plate. A signal of the same phase as the signal on the grid, appears at the cathode of V14A and is coupled through the Sweep Calibrate control and R138 to the cathode of V13A. Here it produces a nearly equal, but 180 degrees out of phase signal at the plate of V13A. The Sweep Calibrate control varies the gain of V13A and V14A by varying the coupling between their cathodes, and by varying the amount of degeneration in the cathode circuit.

Variations in the amplifier gain are used as a means of calibrating the sweep. Since the charging rate of the sweep timing capacitor (in terms of volts per unit time) is known, the time base can be calibrated by setting the gain of the amplifier so the proper number of sawtooth "volts per unit time" will cause the correct horizontal displacement in centimeters.

V13B and V14B form the plate loads for V13A and V14A. With a positive-going signal applied to its grid, V14A conducts and the current through resistor R133 increases. This, in turn causes the voltage at the cathode of V14B to be more positive than the grid and tends to cut off the tube. As the tube conducts less, its internal impedance increases and the voltage across the tube is increased. In effect, these two triodes act like variable resistors which increase in resistance as the current increases, and decreases in resistance as the current decreases. The operation of V13A and V14A is the same, except that V13A is driven through its cathode and the signal output is 180 degrees out-of-phase with respect to V14A. This circuit provides the high amplitude linear output needed to drive the horizontal deflection plates of the CRT.

HIGH VOLTAGE

HV (HIGH VOLTAGE) POWER SUPPLY AND CRT

The high voltage needed to accelerate the electron beam in the CRT is produced by an oscillator. The output of the oscillator is regulated to prevent changes in trace brightness and beam sensitivity with changes in line voltage or circuit loading.

OSCILLATOR CIRCUIT

The high voltage oscillator tube is V24. Feedback to sustain oscillation is supplied from a winding on the primary of transformer T501 and fed through C504 and R507 to the grid of V24. Capacitor C503, across the primary of the transformer, tunes the frequency of oscillation to approximately 65 kc. The component values are chosen to produce a sine wave output from the oscillator.

REGULATOR CIRCUIT

The voltage that is stepped up in transformer T501 is fed through two rectifier-filter combinations to produce +2500 volts DC and -1750 volts DC. Diode D500 and capacitor C507 form the +2500 volt combination, and diode D501, resistor R509 and capacitors C505 and C506 form the -1750 volt combination.

+2500 volts is applied to the post accelerator of the CRT. -1750 volts is applied through R512 and R513 to the HV Adjust control. This control is adjusted so V23A and V23B are in the middle of their operating range with normal line voltage and normal loading on the HV Power Supply.

Voltage regulation is controlled by V23A and V23B in the following manner: If the -1750 volt DC supply decreases, the voltage on the grid of V23A goes less negative and the tube conducts more. This lowers its plate voltage, and the negative-going voltage coupled through R504 to the grid of V23B causes this tube to go toward cutoff, decreasing the current through R505. As the current through R505 decreases, the screen voltage in V24 increases, and the oscillator output increases to restore the -1750 volt level. If the -1700 volt DC level increases, the operation of the circuit reverses.

The +2500 volt level is not directly regulated. But since the transformer secondary supplies both -1750 volts and +2500 volts, the regulated -1750 volt output also holds the higher output very close to normal.

The regulated -1750 volts is applied to the CRT elements through a voltage divider consisting of resistor R511, the Intensity control, resistor R655, the Focus control, and resistor R656. The values of the resistors and potentiometers in this

divider are such that the Intensity and Focus controls provide the proper range of voltage variation for their elements in the CRT. The Astigmatism control applies a voltage between +100 and +300 volts to the accelerator grid to control the shape of the spot on the CRT. (The source of this voltage is in the LV Power Supply.)

PULSE COUPLING TUBE

The electron beam is cut off during retrace and hold-off time to avoid damaging the phosphor screen of the CRT due to a spot remaining too long in one position. This cutoff voltage is supplied by the horizontal sweep circuit through tube V9B.

The voltage at the cathode of V9B in the sweep circuit goes positive only during the sweep cycle. This voltage is coupled to the grid of the CRT through gas-filled corona discharge tube V25 in the following manner: The characteristics of the tube are such that it will maintain a nearly constant 1750 volt potential difference between its cathode and anode. Therefore, since the voltage at the cathode of V9B is approximately +50 volts DC with no sweep, the voltage on the grid of the CRT will be -1700 volts, to satisfy the requirement of 1750 volts across V25. The Intensity control places approximately -1650 volts on the cathode of the CRT, making its grid approximately 50 volts more negative than the cathode, and holding the CRT beam at cutoff.

When the multivibrator starts a sweep, the voltage from the cathode of V9B rises to approximately +100 volts, reducing the negative bias voltage on the grid of the CRT to about -1650 volts, due to the drop across V25. Since the CRT grid voltage is now essentially the same as the cathode voltage, the tube will conduct and a trace will appear on the CRT.

Capacitor C511 is used to improve the high frequency response of the CRT bias circuit. Resistor R515 protects the CRT from excessive grid current, and resistor R514 limits the current through V25. The -1750 volt supply is also coupled to the CRT heater to keep the potential between it and the CRT cathode within safe limits.

Z-AXIS, OR BEAM MODULATION

Intensity modulation signals for the CRT electron beam can be applied to the Z-Axis binding posts on the rear panel if the shorting link is removed. The intensity of the beam is increased with an increase in negative voltage applied to the cathode of the CRT.

LOW VOLTAGE

LV POWER SUPPLY

Regulated DC voltages of -150, +100, and +300 volts, and an unregulated +450 volts, are provided by the LV (Low Voltage) Power Supply.

Each of the three high voltage windings of power transformer T601 is connected to a bridge rectifier circuit. The output voltage of each bridge rectifier is considerably higher than the output voltage from its regulator. This higher voltage allows each regulator to maintain the proper output over a wide range of line voltage changes and varying loads.

The 6.3 volt power transformer windings supply AC voltages for the tube heaters, scale illumination lamps, and the 60 cycle AC for the "Line" Trigger Source. The 6.3 volt winding that supplies the heaters of tubes V13, V14, V17, and V19 is elevated to a DC voltage level of +100 volts to reduce the potential difference between the cathode and heaters of these stages.

The primary windings of the power transformer can be connected in parallel for use on 105 to 125 volt AC lines, or in series for 210 to 250 AC volt operation. The fan remains connected across one of these windings for either line voltage. Actual connections for the power transformer primary are given in the Step-By-Step Assembly section of this Manual.

-150 VOLT SUPPLY

The -150 volt circuit is the most critical of the power supply circuits, since the +100 volt supply, the +300 volt supply, and many other circuits use it as a reference. The positive voltage from the bridge rectifier (diodes D309, D311, D312, and D313) passes through resistor R303 to the plate of series pass regulator tube V20. R303 serves as a protective device against prolonged overloads. The negative voltage from the junction between diodes D309 and D312 becomes the regulated -150 output.

Series pass tube V20 performs like a series resistor between the positive end of the DC supply and ground. That is, the voltage drop across the tube increases with an increase in its resistance when the tube approaches cutoff. The voltage drop across the tube decreases when the tube conducts.

Under normal conditions, V20 operates in the middle of its linear operating range. Its bias is controlled by V22A as follows: The grid voltage of V22A is held essentially constant by gas-filled reference tube V21. The cathode voltage of V22A is controlled by the current flowing through resistor R412. The cathodes of V22A and V22B are tied together. V22B is a cathode follower and its grid voltage is taken from the -150 V Adjust control and R423, R424, and R425.

If the -150 volt supply becomes more negative, the grid and cathode of V22B also becomes more negative. This decreases the bias on V22A and causes it to conduct more and reduce its plate voltage. As the plate voltage of V22A decreases, the negative going voltage coupled through R409 causes V20 to conduct less (increasing its resistance) and restores the -150 volt level. A decrease in the -150 volt level causes the same action, except in the opposite direction.

+100 VOLT, +300 VOLT, AND +450 VOLT SUPPLIES

The +100 volt and +300 volt regulator circuits operate in the same manner as the -150 volt supply, except that the bias for control tubes V18A and V18B is applied directly to the grids rather than through a cathode follower. As in the -150 volt supply, if the output tends to rise, the control tube conducts more heavily. This causes series regulator tube V17 or V19 to conduct less, increasing its internal resistance, and returning the output voltage to its proper level. The regulated -150 volt supply is used as a reference for the +100 volt and +300 volt regulators.

The +450 volt supply is taken directly from the output of the +300 volt bridge rectifier circuit, and it is not regulated. This voltage is used only for the high voltage oscillator circuit.

CIRCUIT BOARD X-RAY VIEWS

(VIEWED FROM FOIL SIDE)

SWEEP AND HORIZONTAL CIRCUIT BOARD

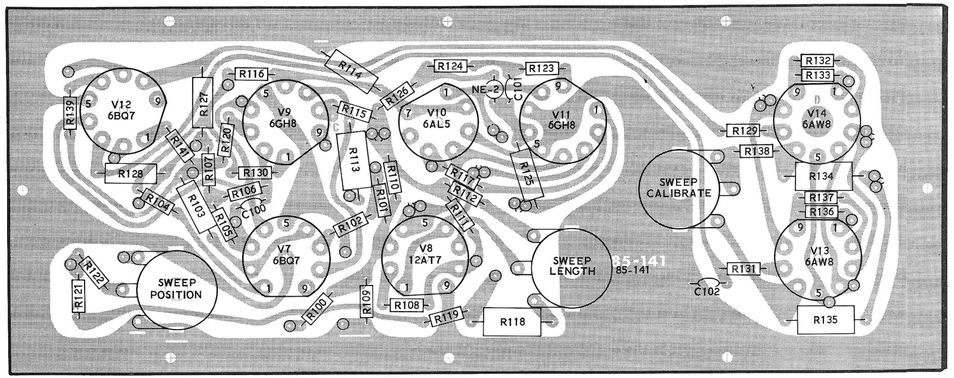

H.V. POWER SUPPLY CIRCUIT BOARD

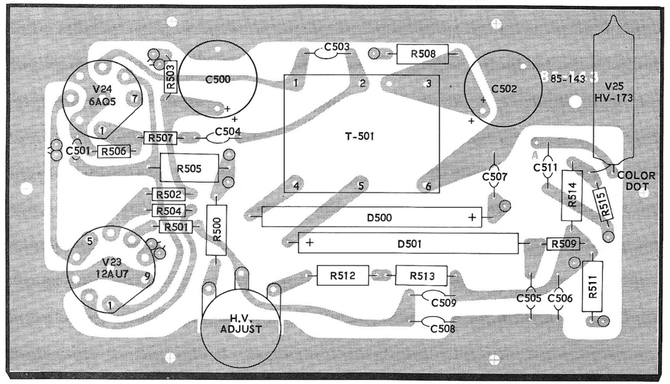

L.V. POWER SUPPLY CIRCUIT BOARD

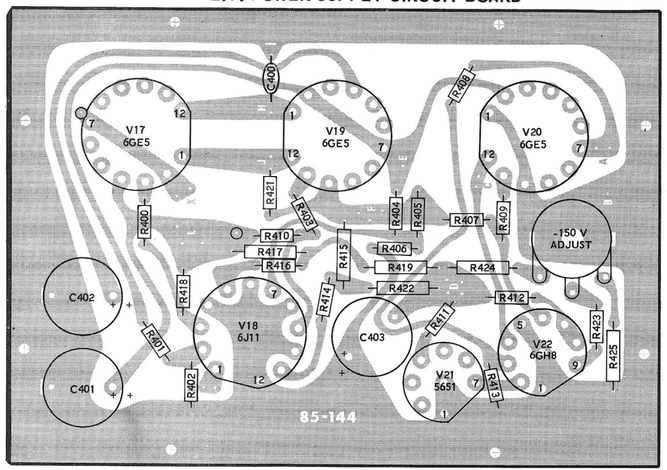

TRIGGER CIRCUIT BOARD

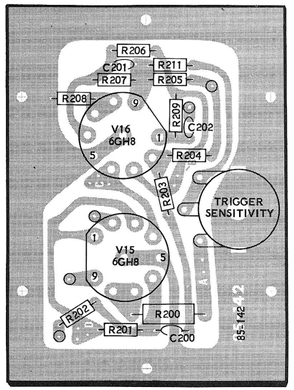

VERTICAL CIRCUIT BOARD

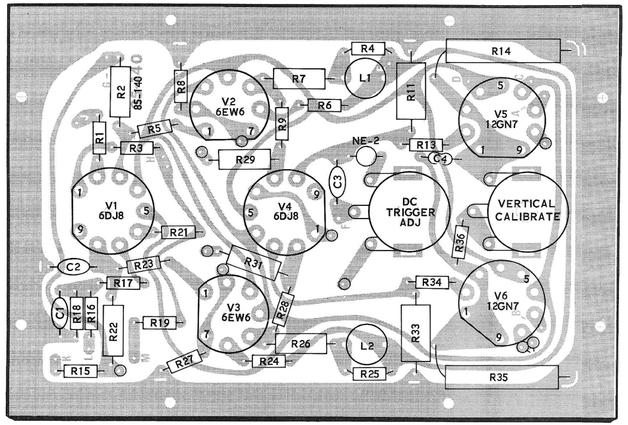

CHASSIS PHOTOGRAPHS

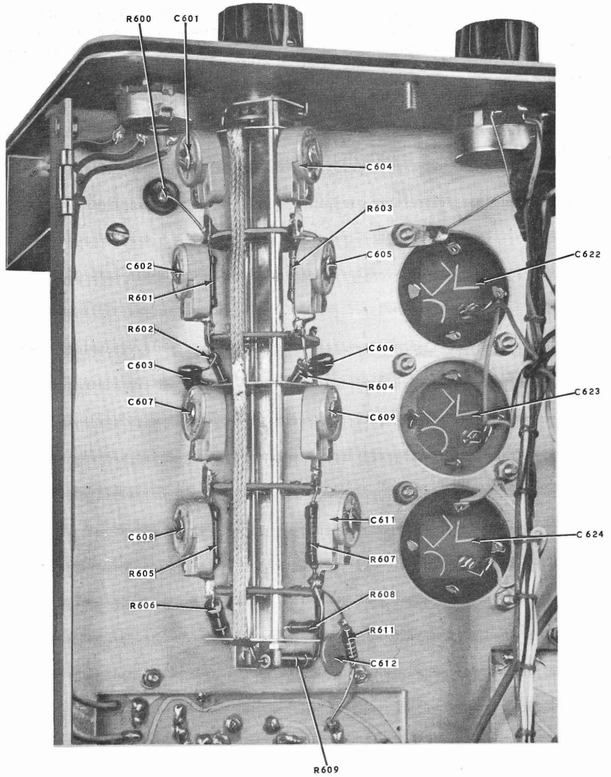

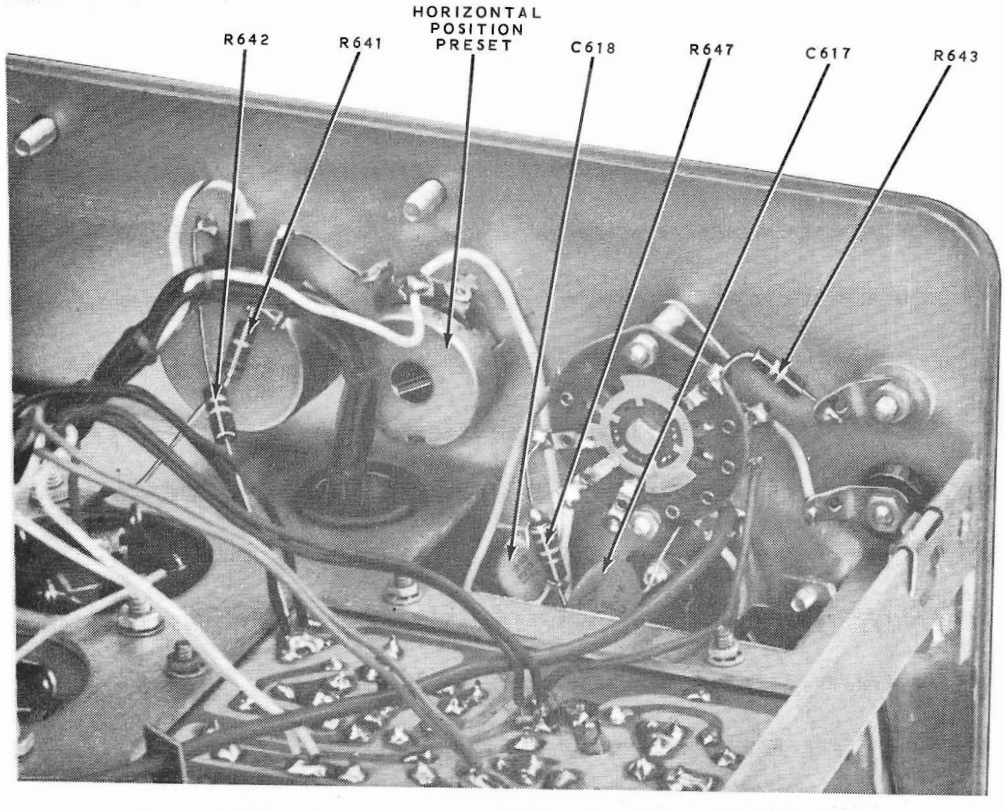
R642
R641
HORIZONTAL POSITION PRESET
C618
R647
C617
R643

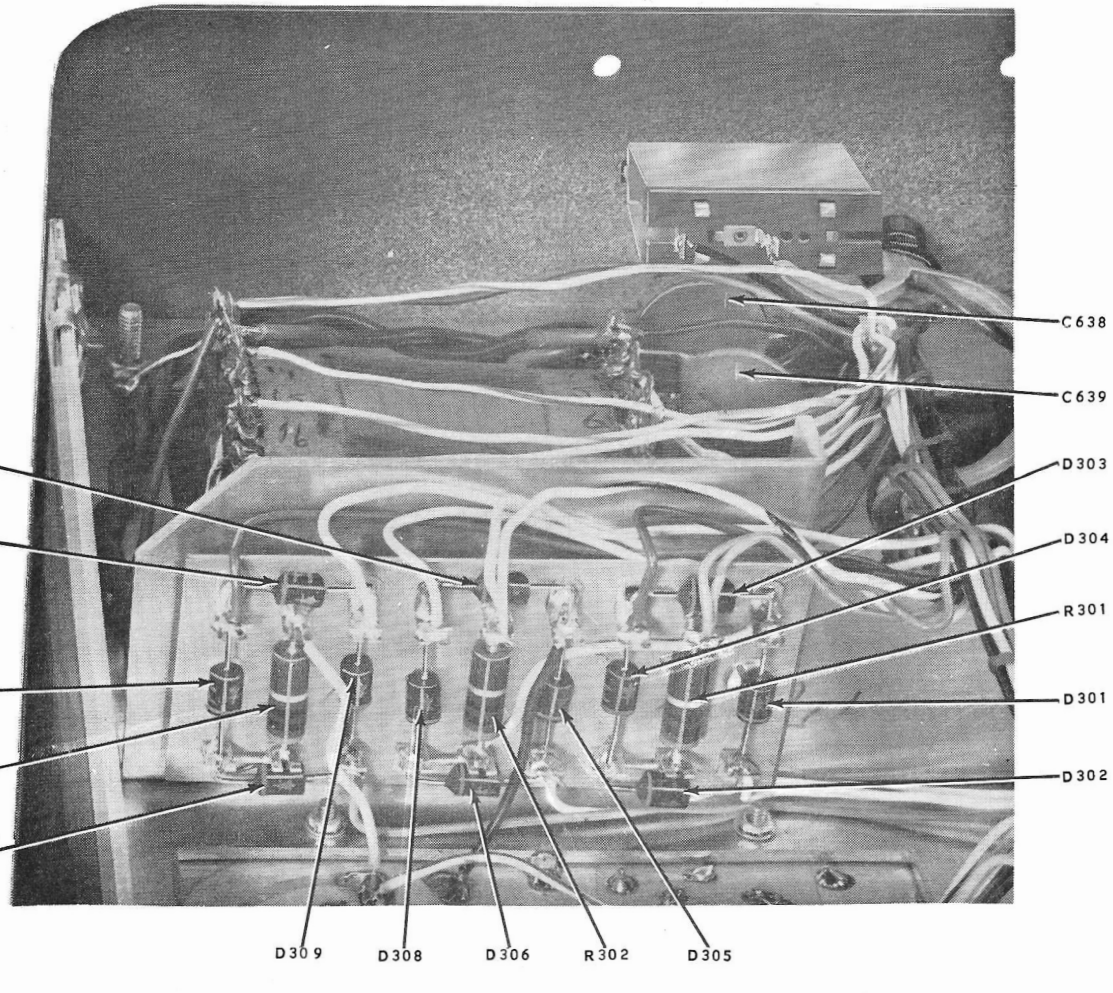
C638
C639
D307
D312
D303
D304
R301
D313
D301
R303
D302
D311
D309
D308
D306
R302
D305

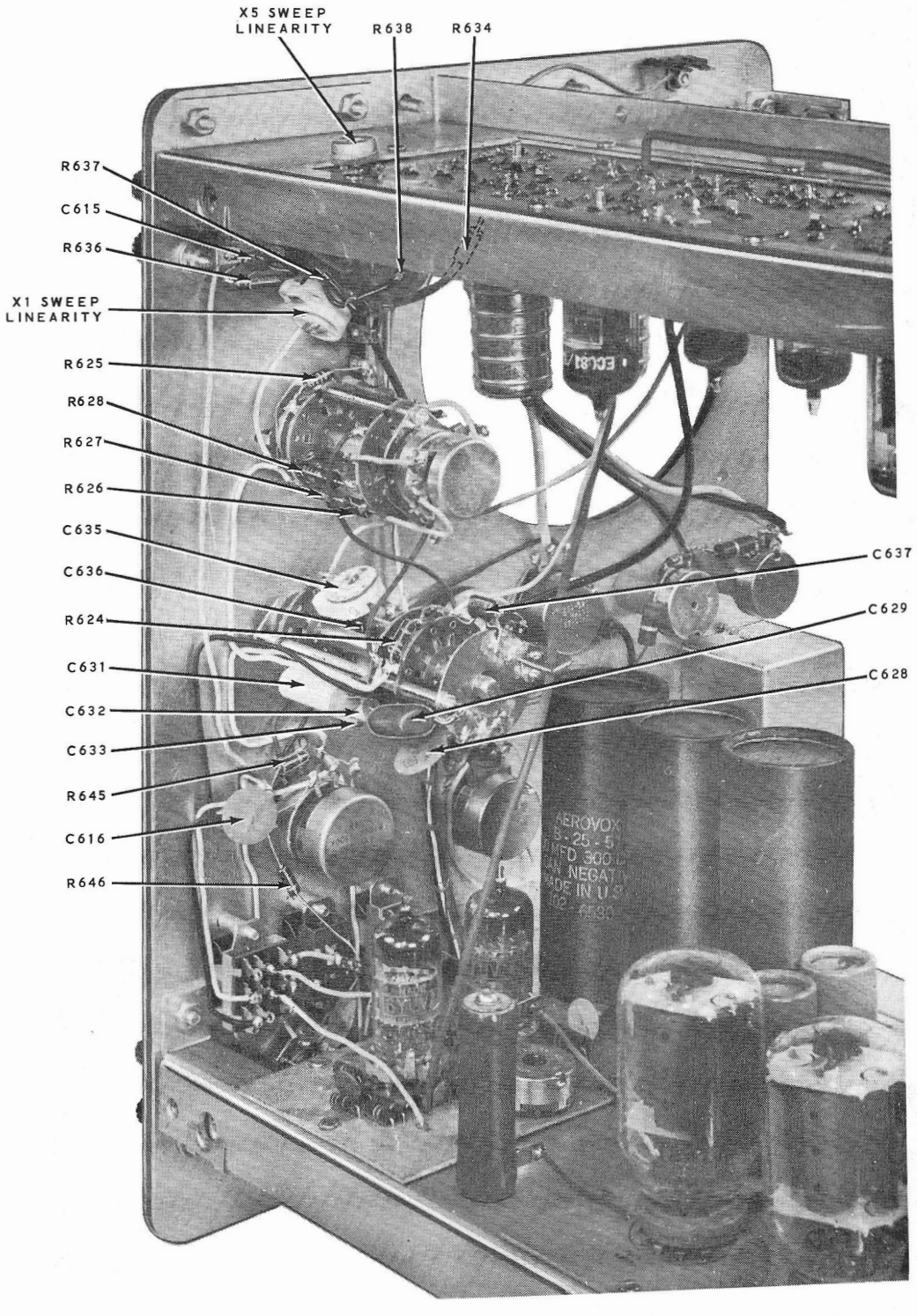
X5 SWEEP LINEARITY
R638
R634
R637
C615
R636
X1 SWEEP LINEARITY
R625
R628
R627
R626
C635
C636
R624
C631
C632
C633
R645
C616
R646
C637
C629
C628

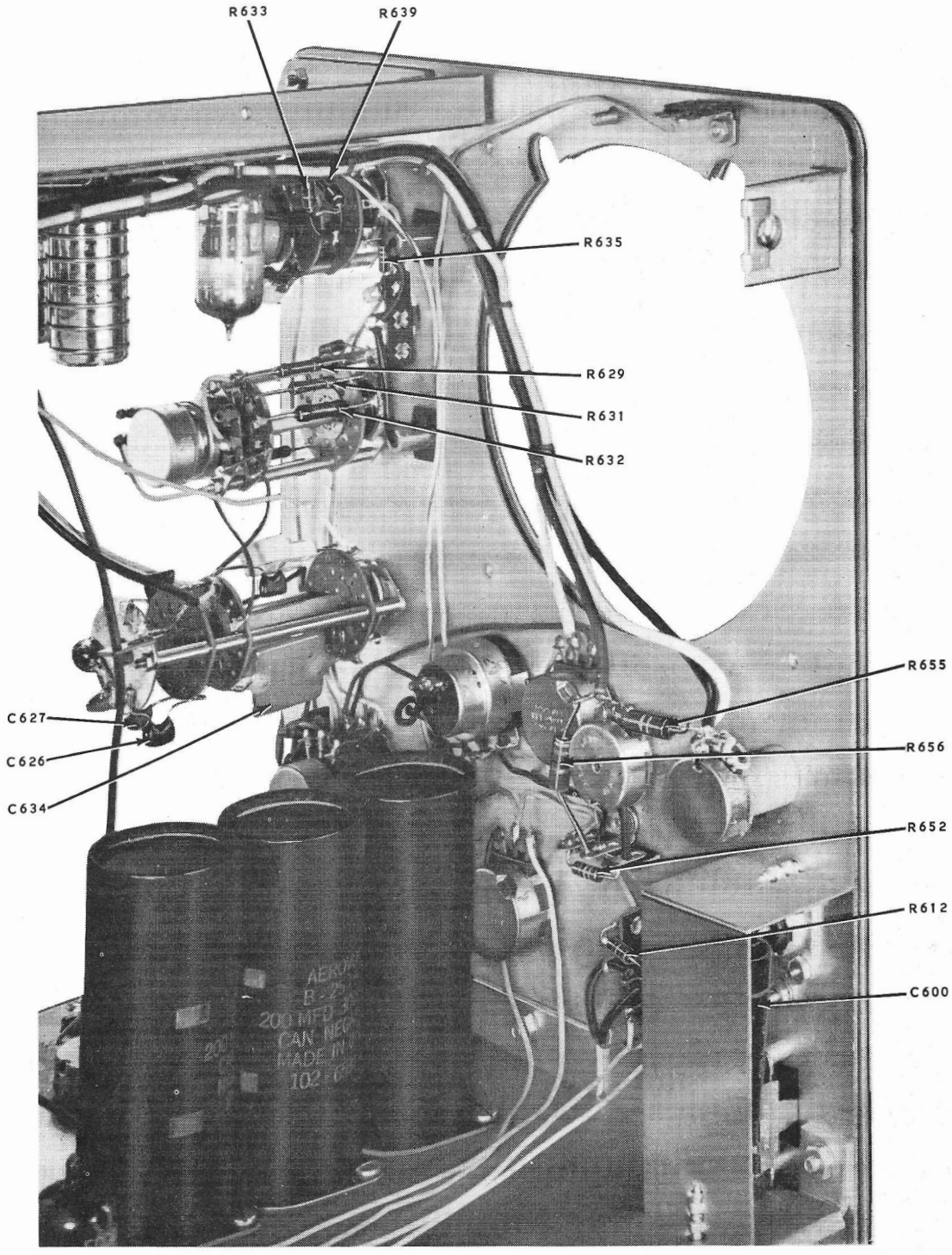
R633
R639
R635
R629
R631
R632
C627
C626
C634
R655
R656
R652
R612
C600

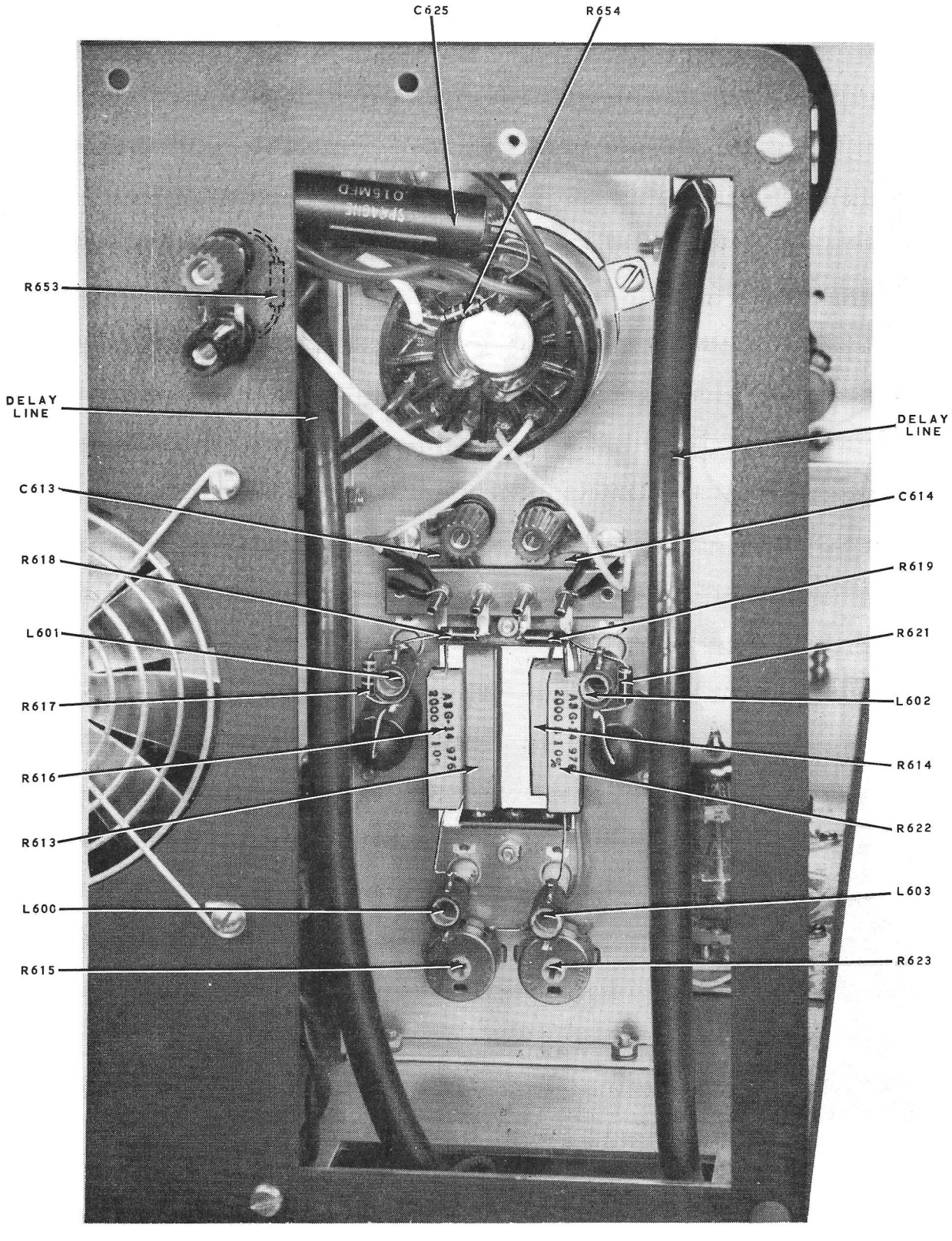
C625
R654
R653
DELAY LINE
C613
R618
L601
R617
R616
R613
L600
R615
DELAY LINE
C614
R619
R621
L602
R614
R622
L603
R623

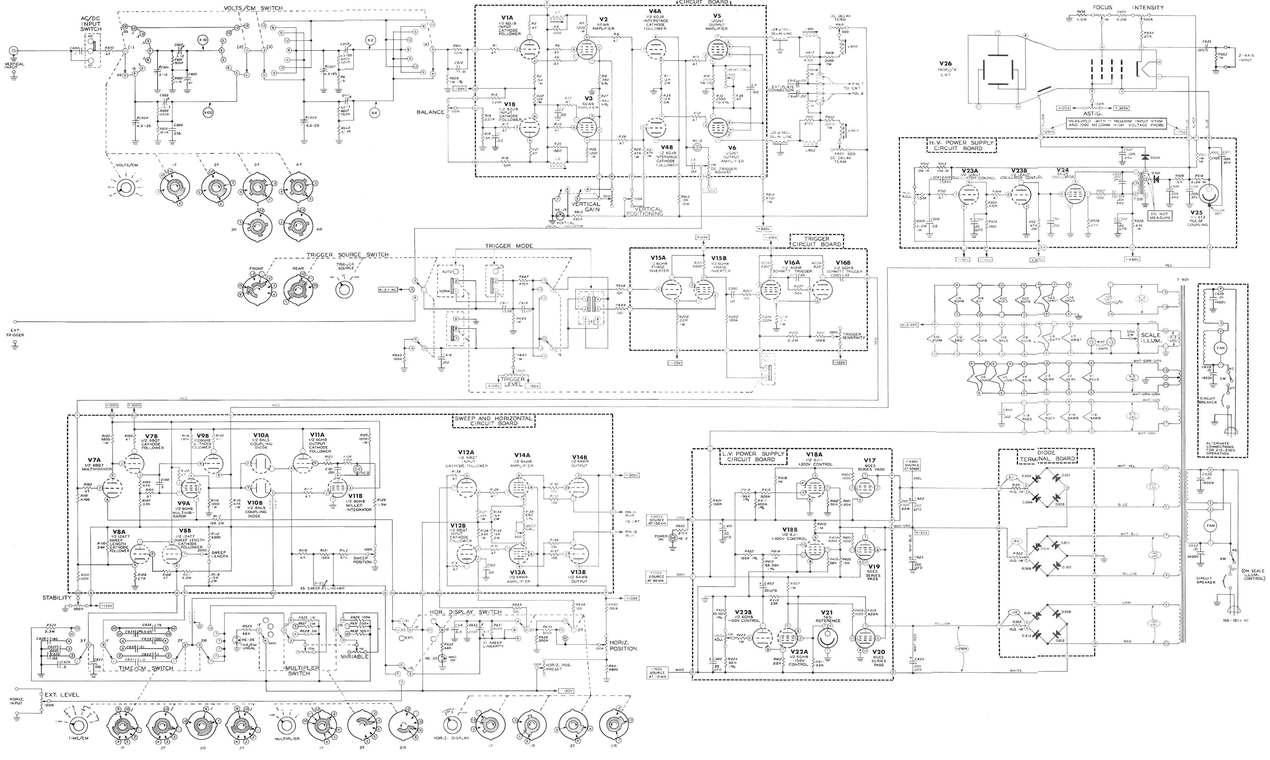

SCHEMATIC OF THE HEATHKIT® LABORATORY OSCILLOSCOPE MODEL IO-14

1. RESISTOR AND CAPACITOR NUMBERS ARE IN THE FOLLOWING GROUPS:

0- 99	PARTS MOUNTED ON THE VERTICAL AMPLIFIER CIRCUIT BOARD.
100-199	PARTS MOUNTED ON THE SWEEP AND HORIZONTAL CIRCUIT BOARD.
200-299	PARTS MOUNTED ON THE TRIGGER CIRCUIT BOARD.
300-399	PARTS MOUNTED ON THE LOW VOLTAGE POWER SUPPLY CIRCUIT BOARD.
400-499	PARTS MOUNTED ON THE LOW VOLTAGE POWER SUPPLY CIRCUIT BOARD.
500-599	PARTS MOUNTED ON THE HIGH VOLTAGE POWER SUPPLY CIRCUIT BOARD.
600-699	PARTS NOT MOUNTED ON CIRCUIT BOARDS.

2. ALL RESISTORS ARE 1/2 WATT UNLESS MARKED OTHERWISE, RESISTOR VALUES ARE IN OHMS (K = 1000, MEG = 1,000,000).

3. ALL RESISTORS MOUNTED ON VOLT/CM SWITCH ARE 1% PRECISION RESISTORS.

4. CAPACITOR VALUES LESS THAN 1 ARE IN μF, VALUES OF 1 AND ABOVE ARE IN pF, UNLESS THEY ARE MARKED OTHERWISE.

5. ALL SWITCH ROTORS SHOWN IN FULL COUNTERCLOCKWISE POSITION WHEN VIEWED FROM THE KNOB END.

6. ARROW ("►") INDICATES CLOCKWISE ROTATION OF THE KNOB IVIEWED FROM THE KNOB END).

7. ARROW ("►") INDICATES REAR VIEW OF SWITCH WAFER.

8. CONTROLS, SWITCHES, AND CONNECTORS NAMED IN HEAVY TYPE ARE MOUNTED ON THE FRONT PANEL.

9. REFER TO THE CHASSIS PHOTOGRAPHS AND CIRCUIT BOARD X-RAY VIEWS (FOLD-OUT FROM PAGE 136) FOR THE PHYSICAL LOCATION OF PARTS.

10. ⏚ALL VOLTAGES MEASURED FROM THE POINT SHOWN TO CHASSIS GROUND.

11. ⌒ALL VOLTAGES MEASURED BETWEEN THE POINTS SHOWN.

PAGE 140
IS
BLANK

REPLACEMENT PARTS PRICE LIST

TRIGGER CIRCUIT BOARD

PARTS LIST #1

PART No.	PRICE Each	DESCRIPTION
RESISTORS		
1/2 Watt		
1-3	.10	100 Ω
1-8	.10	820 Ω
1-14	.10	3300 Ω
1-18	.10	5600 Ω
1-26	.10	100 KΩ
1-121	.10	120 KΩ
1-27	.10	150 KΩ
1-29	.10	220 KΩ
1-37	.10	2.2 megohm
1 Watt		
1-5-1	.10	22 KΩ
1-58-1	.10	12 KΩ
CAPACITORS		
Disc		
21-5	.10	20 μμf
21-7	.10	33 μμf
21-16	.10	.01 μfd
GENERAL		
10-165	.60	100 KΩ tab mount control
331-6	.15	Solder
434-130	.15	9-pin tube socket
ITEMS FROM PACK #8		
85-172-1	1.10	Trigger circuit board
595-803	2.00	Manual

HIGH VOLTAGE CIRCUIT BOARD

PARTS LIST #2

PART No.	PRICE Each	DESCRIPTION
RESISTORS		
1/2 Watt		
1-1	.10	47 Ω
1-9	.10	1000 Ω
1-11	.10	1500 Ω
1-20	.10	10 KΩ
1-25	.10	47 KΩ
1-33	.10	470 KΩ
1 Watt		
1-1-1	.10	470 Ω
1-34-1	.10	1 megohm
1-36-1	.10	2.2 megohm
1-37-1	.10	3.3 megohm
1-40-1	.10	10 megohm
2 Watt		
1-10-2	.20	47 KΩ
CAPACITORS		
Disc		
21-14	.10	.001 μfd
21-90	.20	.001 μfd 3 KV
21-116	.35	.005 μfd 3 KV
21-31	.10	.02 μfd
Electrolytic		
25-135	.75	20 μfd 350 V
25-158	.85	20 μfd 450 V

PART No.	PRICE Each	DESCRIPTION
GENERAL		
10-179	.45	7.5 megohm tab mount control
57-36	2.85	Selenium rectifier
207-18	.10	3/8" plastic clamp
250-89	.05	6-32 x 3/8" screw
252-3	.05	6-32 nut
254-1	.05	#6 lockwasher
411-116	7.85	HV173 tube
434-129	.15	7-pin tube socket
General (cont'd.)		
434-130	.15	9-pin tube socket
490-5	.10	Nut starter (see Page 3 of the Kit Builders Guide)

ITEMS FROM PACK #8

CAUTION: Pick up the high voltage transformer only by its frame. Do not touch the leads, as they could break easily.

51-134	5.00	High voltage transformer
85-143-1	1.55	High voltage circuit board

LOW VOLTAGE CIRCUIT BOARD

PARTS LIST #3

PART No.	PRICE Each	DESCRIPTION
RESISTORS		
1/2 Watt		
1-9	.10	1000 Ω
1-21	.10	15 KΩ
1-22	.10	22 KΩ
1-24	.10	33 KΩ
1-47	.10	56 KΩ
1-60	.10	68 KΩ
1-26	.10	100 KΩ
1-121	.10	120 KΩ
1-33	.10	470 KΩ
1-68	.10	820 KΩ
1-35	.10	1 megohm
Precision		
2-40	.20	68.38 KΩ
2-99	.20	50 KΩ
2-11	.25	100 KΩ
Precision (cont'd.)		
2-102	.70	196 KΩ
2-138	.20	400 KΩ
CAPACITORS		
21-31	.10	.02 μfd disc
25-135	.75	20 μfd 350 V electrolytic
GENERAL		
10-38	.35	10 KΩ tab mount control
434-129	.15	7-pin tube socket
434-130	.15	9-pin tube socket
434-140	.20	12 pin tube socket

ITEM FROM PACK #8

85-144-1	2.00	Low voltage circuit board

VERTICAL CIRCUIT BOARD

PARTS LIST #4

PART No.	PRICE Each	DESCRIPTION
RESISTORS		
1/2 Watt		
1-1	.10	47 Ω
1-5	.10	360 Ω 5%
1-9	.10	1000 Ω
1-21	.10	15 KΩ
1-27	.10	150 KΩ
1-29	.10	220 KΩ
1 Watt		
1-56-1	.10	1200 Ω
1-26-1	.10	15 KΩ
1-7-1	.10	47 KΩ
Other Resistors		
1-22-2	.20	12 KΩ 2 watt
3-1-5	.15	2500 Ω 7 watt wire-wound

PART No.	PRICE Each	DESCRIPTION
CAPACITORS		
20-102	.15	100 μμf mica
21-31	.10	.02 μfd disc
GENERAL		
10-135	.55	500 Ω tab mount control
10-161	.45	2 megohm tab mount control
40-732	.20	Driver peaking coil
General (cont'd.)		
412-11	.20	NE-2 neon lamp
434-129	.15	7-pin tube socket
434-130	.15	9-pin tube socket
ITEMS FROM PACK #8		
85-140-1	1.60	Vertical circuit board
344-54	.05/ft	Yellow hookup wire

HORIZONTAL CIRCUIT BOARD

PARTS LIST #5

PART No.	PRICE Each	DESCRIPTION
RESISTORS		
1/2 Watt		
1-1	.10	47 Ω
1-3	.10	100 Ω
1-52	.10	680 Ω 5%
1-16	.10	4700 Ω
1-116	.10	6200 Ω 5%
1-23	.10	27 KΩ
1-24	.10	33 KΩ
1-67	.10	39 KΩ
1-25	.10	47 KΩ
1-26	.10	100 KΩ
1-27	.10	150 KΩ
1-31	.10	330 KΩ
1-33	.10	470 KΩ
1-36	.10	1.5 megohm
1-38	.10	3.3 megohm
1 Watt		
1-2-1	.10	1000 Ω
1-25-1	.10	6800 Ω
1-27-1	.10	33 KΩ
1-7-1	.10	47 KΩ
1-28-1	.10	100 KΩ
2 Watt		
1-3-2	.20	10 KΩ
1-4-2	.20	15 KΩ

PART No.	PRICE Each	DESCRIPTION
CAPACITORS		
Disc		
21-78	.10	5 μμf
21-14	.10	.001 μfd
21-31	.10	.02 μfd
Trimmer		
31-13	.90	3.12 μμf
GENERAL		
10-135	.55	500 Ω tab mount control
10-178	.45	2000 Ω tab mount control
10-165	.60	100 KΩ tab mount control
412-11	.20	NE-2 neon lamp
431-73	.10	Single-hole insulator
434-129	.15	7-pin tube socket
434-130	.15	9-pin tube socket
ITEM FROM PACK #8		
85-141-2	2.30	Horizontal circuit board

FRONT AND REAR PANEL

PARTS LIST #6

PART No.	PRICE Each	DESCRIPTION
RESISTORS		
1/2 Watt		
1-3	.10	100 Ω
1-19	.10	6800 Ω
1-60	.10	68 KΩ
1-26	.10	100 KΩ
1-27	.10	150 KΩ
1-30	.10	270 KΩ
1-31	.10	330 KΩ
1-33	.10	470 KΩ
1-35	.10	1 megohm
1-38	.10	3.3 megohm
1 Watt		
1-36-1	.10	2.2 megohm
1-42-1	.10	5.6 megohm
Precision		
2-207	.25	10.1 KΩ
2-11	.25	100 KΩ
3-208	.25	111 KΩ
2-54	.20	200 KΩ
2-211	.25	333 KΩ
2-76	.25	500 KΩ
2-212	.25	750 KΩ
2-123	.25	800 KΩ
2-51	.20	900 KΩ
2-210	.25	990 KΩ
2-14	.20	1 megohm
2-55	.20	2 megohm
2-80	.30	5 megohm
CAPACITORS		
Mica		
20-101	.15	47 μμf
20-110	.15	75 μμf
20-102	.15	100 μμf
20-105	.20	180 μμf
20-126	.25	255 μμf
20-17	.30	1000 μμf 1%
Disc		
21-33	.10	3.3 μμf
21-14	.10	.001 μfd
21-36	.10	.002 μfd
21-16	.10	.01 μfd
21-31	.10	.02 μfd

PART No.	PRICE Each	DESCRIPTION
Tubular		
23-101	.95	.015 μfd 3 KV
23-47	.30	.1 μfd
Resin		
27-53	4.50	.01 μfd 1%
27-52	4.75	.1 μfd 1%
27-34	.25	.2 μfd
27-51	5.00	1 μfd 1%
Trimmer		
31-44	.95	1.5-7 μμf
31-45	1.05	3.12 μμf
31-10	.95	4.5-25 μμf
CONTROLS		
10-58	.35	100 KΩ tab mount
10-55	2.70	100 KΩ
10-176	.55	500 KΩ
10-177	.55	1 megohm
12-70	5.00	100 KΩ/500 KΩ dual
19-98	1.60	50 Ω w/SPST switch
19-99	.95	500 Ω w/DPST switch
SWITCHES		
60-24	.55	SPST rocker (2 lugs)
60-25	.60	DPDT rocker (6 lugs)
60-28	.85	TPDT rocker (9 lugs)
63-412	1.35	3-position 1-wafer rotary
63-414	3.40	3-position 2-wafer rotary w/control
63-415	5.00	4-position 2-wafer rotary w/dual control
63-413	2.70	6-position 3-wafer rotary
63-416	3.30	9-position 4-wafer rotary
INSULATORS-CLAMPS-TERMINAL STRIPS		
75-17	.10	Binding post base insulator
207-4	.10	1/4" plastic cable clamp
207-19	.10	5/16" plastic cable clamp
255-55	.35	Phenolic tapped insulator
431-73	.10	Single-hole insulator
431-14	.10	2-lug terminal strip
431-10	.10	3-lug terminal strip

PART No.	PRICE Each	DESCRIPTION
GENERAL		
204-9	.10	Angle bracket
204-699	.25	Long L bracket
343-7	.05/ft	Small coaxial cable
345-1	.10/ft	Flat braid
412-36	.20	NE-2E neon lamp
420-36	10.45	Fan assembly
436-5	.85	Coaxial connector
413-10	.10	Red lens
413-11	.10	Clear lens
HARDWARE		
#4 Hardware		
250-273	.05	4-40 x 3/8" screw
252-2	.05	4-40 nut
254-9	.05	#4 lockwasher
#6 Hardware		
250-56	.05	6-32 x 1/4" screw
250-26	.05	6-32 x 5/8" screw
252-3	.05	6-32 nut
253-45	.05	5/32" ID flat washer
254-1	.05	#6 lockwasher
255-3	.05	#6 x 3/8" spacer
259-1	.05	#6 solder lug
427-3	.15	6-32 binding post base
#8 Hardware		
250-137	.05	8-32 x 3/8" screw
252-4	.05	8-32 nut
254-2	.05	#8 lockwasher
Other Hardware		
252-7	.05	3/8-32 control nut
252-32	.05	Push-on nut
254-5	.05	3/8" control lockwasher
455-53	.35	3/8-32 double bushing
ITEMS FROM PACK #8		
344-13	.05/ft	Large blue hookup wire
344-50	.05/ft	Black hookup wire
344-51	.05/ft	Brown hookup wire
344-53	.05/ft	Orange hookup wire
344-55	.05/ft	Green hookup wire
344-59	.05/ft	White hookup wire
346-1	.05/ft	Sleeving
203-435	1.65	Front subpanel
203-437-1	1.50	Rear panel

TOP AND BOTTOM CHASSIS

PARTS LIST #7

PART No.	PRICE Each	DESCRIPTION
RESISTORS		
1/2 Watt		
1-16	.10	4700 Ω
1-35	.10	1 megohm
1 Watt		
1-11-1	.10	10 Ω
Wire-wound		
3-11-25	.90	1500 Ω (1.5 KΩ) 25 watt
3-14-7	.15	2000 Ω 7 watt
3-21-7	.15	4700 Ω 7 watt
3-7-10	.30	10 KΩ 10 watt
CAPACITORS		
21-31	.10	.02 μfd disc
25-51	1.95	200 μfd 300 V electrolytic
INSULATORS-CLAMPS-TERMINAL STRIPS		
73-4	.10	5/16" rubber grommet
73-3	.10	1/2" rubber grommet
73-2	.10	3/4" rubber grommet
75-17	.10	Binding post base insulator
207-2	.20	CRT clamp
207-8	.10	1/2" metal clamp
431-73	.10	Single-hole insulator
431-74	.10	2-hole insulator
431-2	.10	2-lug terminal strip
431-65	.25	4-pin terminal strip
431-72	.45	18-lug terminal board
481-1	.10	Metal capacitor mounting wafer
481-3	.10	Insulated capacitor mounting wafer

PART No.	PRICE Each	DESCRIPTION
GENERAL		
11-65	.50	500 Ω tab mount control
40-733	.35	Output peaking coil
40-734	.40	Delay line coil
57-27	.60	Silicon diode (750 ma 500 V)
100-16-18	.10	Red binding post cap
HARDWARE		
#4 Hardware		
250-273	.05	4-40 x 3/8" screw
252-89	.05	4-40 push-on nut
#6 Hardware		
250-56	.05	6-32 x 1/4" screw
250-89	.05	6-32 x 3/8" screw
250-26	.05	6-32 x 5/8" screw
250-79	.05	6-32 x 1-1/4" screw
252-3	.05	6-32 nut
253-45	.05	5/32" ID flat washer
254-1	.05	#6 lockwasher
255-1	.05	#6 x 1/4" spacer
#6 Hardware (cont'd.)		
453-32	.15	#6 x 1-1/4" tapped spacer
259-1	.05	#6 solder lug
259-12	.05	Binding post solder lug
427-2	.10	6-32 binding post base
#8 Hardware		
250-137	.05	8-32 x 3/8" screw
252-4	.05	8-32 nut
254-2	.05	#8 lockwasher
ITEMS FROM PACK #8		
41-2	29.00	Pair of delay lines
344-6	.05	Large red wire
200-458	1.80	Top chassis
200-457	3.10	Bottom chassis
204-695	.70	CRT support chassis
204-697	.75	Chassis support bracket

UNIT ASSEMBLY AND WIRING

PARTS LIST #8

PART No.	PRICE Each	DESCRIPTION
RESISTORS		
1-1	.10	47 Ω 1/2 watt
1-23	.10	27 KΩ 1/2 watt
CAPACITORS		
21-70	.20	.01 μfd 1.4 KV disc
INSULATOR-CLAMPS-TERMINAL STRIPS		
73-14	.65	CRT anode insulator
75-71	.10	Line cord strain relief
75-30	.10	Line cord strain relief (round cord)
207-8	.10	1/2" metal clamp
207-19	.10	5/16" plastic clamp
431-14	.10	2-lug terminal strip
LINE CORD-CABLE ASSEMBLIES-WIRE		
89-23	.80	3-wire line cord
134-64	.40	Yellow wire with spring connectors
Line Cord-Cable Assemblies-Wire (cont'd.)		
134-125	3.75	Top wiring harness
134-126	3.80	Bottom wiring harness
343-2	.10/ft	Large coaxial cable
344-57	.05/ft	Violet wire
TUBES-LAMPS		
411-115	42.00	5ADP2 or 5ADP31 CRT (cathode ray tube)
411-40	.90	6AL5 tube
411-60	1.15	6AQ5 tube
411-96	1.80	6AW8 tube
411-71	1.90	6BQ7A tube
411-208	2.15	6DJ8 tube
411-170	1.20	6EW6 tube
411-185	1.95	6GE5 tube
411-193	1.60	6GH8 tube
411-168	2.40	6J11 tube
411-153	1.20	12AU7 tube

PART No.	PRICE Each	DESCRIPTION
Tubes-Lamps (cont'd.)		
411-24	1.45	12AT7 tube
411-196	1.95	12GN7 tube
411-94	1.80	5651 tube
412-1	.15	#47 lamp

KNOBS

462-221	.50	Red knob with 3/16" hole
462-222	.45	Red knob with 1/4" hole
462-219	.25	Black knob with 1/4" hole
462-220	.30	Black knob with through hole

GENERAL

54-165	19.10	Low voltage transformer
65-17	.65	Circuit breaker
206-68	.10	Miniature tube shield
211-22	2.55	Handle with caps
212-22	.40	Shorting link
260-1	.15	Alligator clip
260-6	.25	CRT anode clip
261-1	.05	Push-in rubber foot
261-2	.05	Small rubber foot
261-6	.10	Large rubber foot
432-27	.40	3-prong plug adapter
434-153	1.90	14-pin CRT socket
438-9	.75	Coaxial plug
438-12	.20	Coaxial plug insert
490-1	.10	Alignment tool
100-16-18	.10	Red binding post cap
100-16-2	.10	Black binding post cap
414-6	.40	Green grid screen
414-16	5.00	CRT graticule
391-17	.15	Nameplate

HARDWARE

#6 Hardware

250-56	.05	6-32 x 1/4" screw
250-8	.05	#6 x 3/8" sheet metal screw
250-89	.05	6-32 x 3/8" screw
250-276	.05	6-32 x 3/8" flat head screw
250-12	.05	#6 x 5/8" sheet metal screw
250-26	.05	6-32 x 5/8" screw
252-3	.05	6-32 nut
253-45	.05	5/32" ID flat washer
254-1	.05	#6 lockwasher
259-1	.05	#6 solder lug
259-22	.05	#6 spade lug

PART No.	PRICE Each	DESCRIPTION
#8 Hardware		
250-108	.05	8-32 x 3/8" self-tapping screw
250-137	.05	8-32 x 3/8" screw
252-4	.05	8-32 nut
254-2	.05	#8 lockwasher
255-37	.20	#8 x 3/4" tapped spacer
#10 Hardware		
250-50	.05	10-32 x 3/8" phillips head screw
250-242	.05	10-24 x 1-1/2" screw
252-30	.05	10-24 nut
254-3	.05	#10 lockwasher
259-5	.05	#10 solder lug
3/8" Hardware		
252-7	.05	3/8-32 control nut
253-10	.05	Control flat washer
Other Hardware		
250-287	.20	Bezel mounting stud
252-86	.10	Knurled nut
252-87	.10	1/4 turn fastener
253-49	.10	Nylon flat washer
266-87	.30	Cabinet mounting stud
452-12	.05	Cabinet mounting stud pin

METAL PARTS

100-578	31.75	CRT shield
210-29	3.30	Panel ring
90-333-1	3.95	Cabinet shell
203-436-1	1.75	Front panel
204-696	.95	Rail
204-698	.10	Short L bracket
205-511-1	.60	Rear access door
205-512	1.50	Top trim plate
205-513	.40	Bottom trim plate (painted)
205-514	.50	Wide spacer plate
205-515	.40	Narrow spacer plate
206-288	.45	High voltage shield
206-289	.20	Vertical input shield
210-28	1.00	Bezel

The above prices apply only on purchases from the Heath Company where shipment is to a U.S.A. destination. Add 10% (minimum 25 cents) to the price when ordering from an authorized Service Center or Heathkit Electronic Center to cover local sales tax, postage and handling. Outside the U.S.A. parts and service are available from your local Heathkit source and will reflect additional transportation, taxes, duties and rates of exchange.

Digitized by Mike Willegal
June, 2026
Version 1.0 (hi-res)
Email: mike@willegal.net
Website: www.willegal.net

HEATH COMPANY

BENTON HARBOR, MICHIGAN

THE WORLD'S FINEST ELECTRONIC EQUIPMENT IN KIT FORM

LITHO IN U. S. A.

LABORATORY OSCILLOSCOPE MODEL IO-14

SCHEMATIC OF THE HEATHKIT® LABORATORY OSCILLOSCOPE MODEL IO-14

1. RESISTOR AND CAPACITOR NUMBERS ARE IN THE FOLLOWING GROUPS:

0- 99	PARTS MOUNTED ON THE VERTICAL AMPLIFIER CIRCUIT BOARD.
100-199	PARTS MOUNTED ON THE SWEEP AND HORIZONTAL CIRCUIT BOARD.
200-299	PARTS MOUNTED ON THE TRIGGER CIRCUIT BOARD.
300-399	PARTS MOUNTED ON THE DIODE TERMINAL BOARD.
400-499	PARTS MOUNTED ON THE LOW VOLTAGE POWER SUPPLY CIRCUIT BOARD.
500-599	PARTS MOUNTED ON THE HIGH VOLTAGE POWER SUPPLY CIRCUIT BOARD.
600-699	PARTS NOT MOUNTED ON CIRCUIT BOARDS.

2. ALL RESISTORS ARE 1/2 WATT UNLESS MARKED OTHERWISE. RESISTOR VALUES ARE IN OHMS (K = 1000, MEG = 1,000,000).
3. ALL RESISTORS MOUNTED ON VOLT/CM SWITCH ARE 1% PRECISION RESISTORS.
4. CAPACITOR VALUES LESS THAN 1 ARE IN µfd. VALUES OF 1 AND ABOVE ARE IN pF, UNLESS THEY ARE MARKED OTHERWISE.
5. ALL SWITCH ROTORS SHOWN IN FULL COUNTERCLOCKWISE POSITION WHEN VIEWED FROM THE KNOB END.
6. ARROW (↷) INDICATES CLOCKWISE ROTATION OF THE KNOB (VIEWED FROM THE KNOB END).
7. ARROW (↶) INDICATES REAR VIEW OF SWITCH WAFER.
8. CONTROLS, SWITCHES, AND CONNECTORS NAMED IN HEAVY TYPE ARE MOUNTED ON THE FRONT PANEL.
9. REFER TO THE CHASSIS PHOTOGRAPHS AND CIRCUIT BOARD X-RAY VIEWS (FOLD-OUT FROM PAGE 134) FOR THE PHYSICAL LOCATION OF PARTS.
10. □ ALL VOLTAGES MEASURED FROM THE POINT SHOWN TO CHASSIS GROUND.
11. ⬭ ALL VOLTAGES MEASURED BETWEEN THE POINTS SHOWN.